Chapter 2

ELECTRONIC MEASURING DEVICES

OUTLINE

- Analog Multimeters
- Digital Multimeters

OBJECTIVES

Given various electronic devices, symbols, and diagrams, you will be able to accomplish the following objectives:

- Describe the basic functions of an analog multimeter.
- Describe the proper methods to measure current, voltage, and resistance using an analog multimeter.
- Describe the basic functions of a digital multimeter.
- Describe the proper methods to measure current, voltage, and resistance using a digital multimeter.
- Describe how to use current shunts with a multimeter to extend its range.
- Describe how to use voltage multipliers with a multimeter to extend its range.

Analog Multimeter

- The term "multimeter" refers to an electronic test instrument that, with the flip of a switch, can be set up to measure current, voltage or resistance.

- There are two basic types of multimeters—analog and digital.

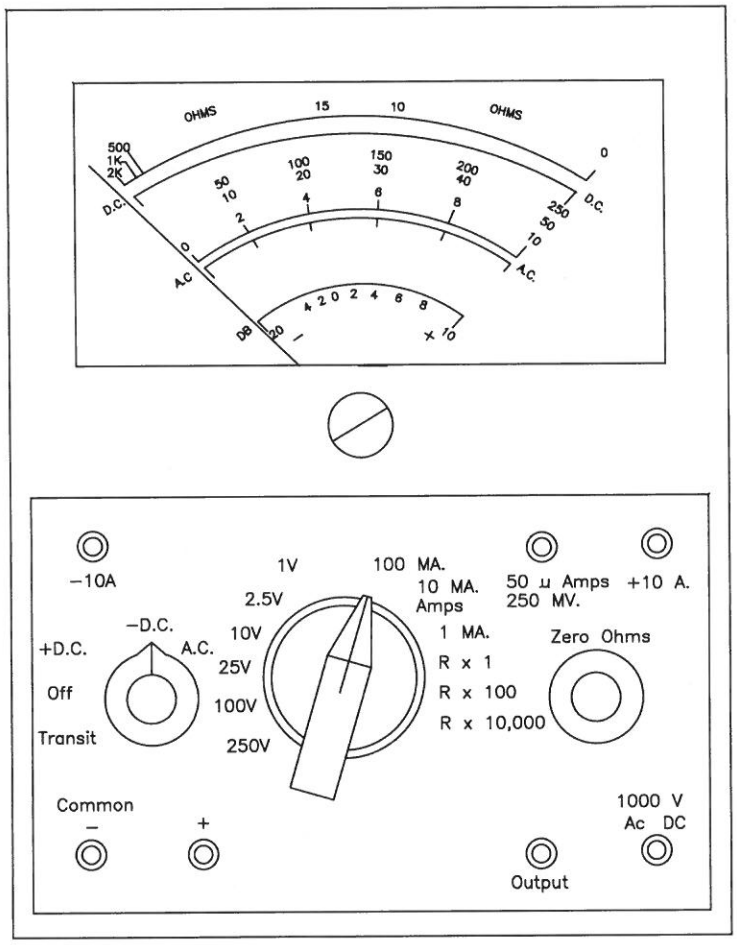

Common Analog Meter

Figure 2-1

- An Analog Meter, as shown in Figure 2-1, has multiple scales printed on its face and is also called a volt-ohm-milliammeter (VOM). The term "analog" means that the meter movement shows gradual increases and decreases as they occur.

- The basic dc meter is called the d'Arsonval meter or a moving coil. With the addition of rectifiers is can also indicate alternating currents and voltages. The schematic symbol for the meter is a small circle with a V, A, Ω, etc. inside of it.

Meter Schematic Symbols

Figure 2-2

- The Analog meter is an electromagnetic device. It consists of the following parts:

  - A horseshoe-shaped permanent magnet
  - A round iron core between the magnet poles
  - A rotary device made of several parts that include a lightweight coil, a pointer attached to the coil, two delicate spiral springs to return the pointer to the zero position, and two precisely ground bearings.
  - A calibrated paper or metal scale
  - A metal or plastic case

- Controls common to all analog multimeters are the function selector, range setting, ohms adjust/ohms zero, and mechanical zero.

- Although the analog multimeter uses the same meter movement to indicate current, voltage, and resistance, a different scale is needed for each function.

- Refer to Figure 2-1. The upper scale is used to measure resistance, while the lower scales are used to measure AC and DC voltage or current.

- Most multimeters, analog or digital, are equipped with a set of meter leads that must be connected to the meter prior to using it. Common lead colors are black and red. (The black lead is negative and the red lead is positive)

Meter Movement Ratings

- Meters movements are rated for current, internal resistance and voltage.

- The full-scale current rating represents the coil current needed to cause the meter to deflect to the maximum value of the scale.

- All basic meter movements have a small amount of internal resistance. The resistance is derived from the small diameter wire used in the coil. The internal resistance of the meter movement has an inverse relationship to the full-scale current rating. The lower the full-scale current rating the higher the internal resistance.

- Most manufacturers specify both the full-scale current rating and the internal resistance rating, however, Ohms Law can be used to determine the voltage rating. The formula $V_m = I_m \times R_m$ is used where V_m represents the voltage across the meter; I_m represents the full-scale current; and R_m represents the internal resistance.

The following is a list of general rules for using an analog multimeter:

- Connect the leads to the meter.

- Set the function switch to the correct position.

- Set the range switch to the correct position.

- Connect the meter to the circuit correctly.

- Locate and read the correct meter scale.

Voltage Measurements

When using an analog multimeter as a voltmeter, several precautions must be observed.

- DO NOT touch the metal probe tips with your fingers. You may get a serious electrical shock.

- OBSERVE POLARITY markings when measuring DC voltage.

- When the function switch is in the +DC position, place the black lead in the Common (-) jack, and the red lead in the (+) jack. When the –DC position is used, the black lead Common (-) is positive.

- Make sure that the voltage to be measured WILL NOT EXCEED the voltage range setting selected.

Function Switch

- In order to measure voltage with an analog multimeter, the function switch must be set to the correct voltage, AC or DC, used in the circuit.

Range Switch

- Select a voltage range that is greater than the expected voltage BEFORE a voltage is actually measured.

- Range switch settings are labeled to indicate the maximum voltage to be measured when the switch is set in that position.

- The maximum voltage will cause a full-scale pointer deflection.

- If the voltage being measured greatly exceeds the range setting of the meter, the meter will be severely damaged.

- The most accurate readings result when the point moves into the middle portion of the scale.

Connecting the Meter

- Voltage measurements are made in parallel with the circuit as shown in Figure 2-3.

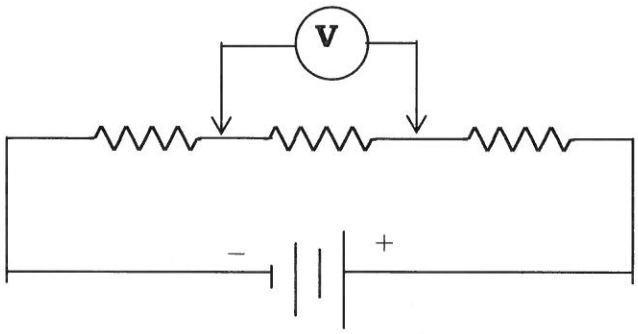

Voltage Measurements

Figure 2-3

- When measuring DC voltage with an analog multimeter, polarity must be observed. This means the negative (black) lead must be connected to the negative side of the battery terminal, and the positive (red) lead must be connected to the positive side of the batter terminal.

- Voltage is measured with circuit power ON.

Voltmeter Multipliers

- A voltmeter's meter internal movement consists of multiplier resistors that are connected in series inside the analog meter. Voltmeter multiplier resistors extend the voltage range of the basic meter movement. They have low tolerances, low temperature coefficients, and very high resistances.

- Figure 2-4 is an example of a voltmeter multiplier.

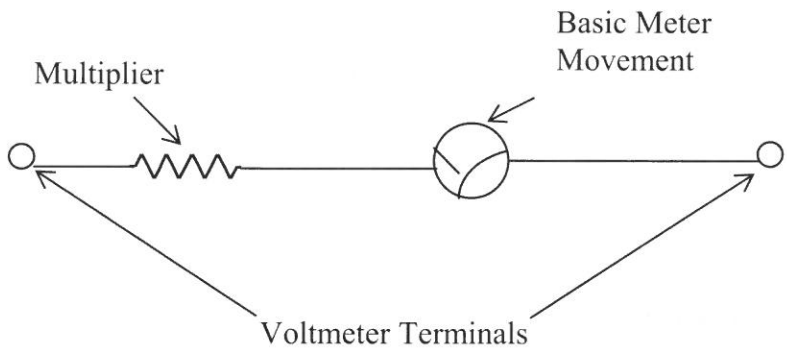

Figure 2-4

Voltmeter Multiplier Calculations

- Using series circuit relationships and Ohm's Law, we can determine the resistance of a multiplier. This is possible because the current through the multiplier (I_{mt}) is the same as the current through the meter (I_m), and the multiplier voltage (V_{mt}) plus the meter-movement voltage (V_m) equals the voltmeter voltage (V_t).

Example: What value multiplier (R_{mt}) is needed to extend a 1mA (I_m), 100Ω meter movement (R_m) to a 10V voltmeter?

$V_m = I_m \times R_m$

Substituting Values

V_m = .001A (1mA) x 100Ω = .1V

V_{mt} = 10V- .1V = 9.9V

$$R_{mt} = \frac{V_{mt}}{I_{mt}}$$

Substituting Values

$$R_{mt} = \frac{9.9V}{.001A} = 9900\Omega$$

NOTE: Refer to Figure 2-4. Imt is equal to Im since the multiplier and the meter movement are in series.

R_{mt} = 9900Ω The value of the multiplier required is equal to 9900Ω

Voltmeter Rating

- An important rating for a multi-range analog voltmeter is its internal resistance. When used as a voltmeter, the analog meters have very high internal resistance. This helps to prevent meter loading, which will be discussed later in this chapter.
- The internal rating of a voltmeter is measured in ohms per volt and indicates the input resistance for each volt of a particular range.
- The ohms per volt rating is also called the "sensitivity" of the meter. It is determined by the full-scale current of the meter movement and can be mathematically expressed as follows:

$$Sensitivity = \frac{1}{full\text{-}scale\ current}$$

Example: Determine the sensitivity of a voltmeter that uses a 40μA meter movement.

$$\text{Sensitivity} = \frac{1}{40\mu A}$$

$$= 25k\Omega/V$$

The sensitivity of the voltmeter is 25kΩ/V

Chapter 2

ELECTRONIC MEASURING DEVICES

OUTLINE

- Analog Multimeters
- Digital Multimeters

OBJECTIVES

Given various electronic devices, symbols, and diagrams, you will be able to accomplish the following objectives:

- Describe the basic functions of an analog multimeter.
- Describe the proper methods to measure current, voltage, and resistance using an analog multimeter.
- Describe the basic functions of a digital multimeter.
- Describe the proper methods to measure current, voltage, and resistance using a digital multimeter.
- Describe how to use current shunts with a multimeter to extend its range.
- Describe how to use voltage multipliers with a multimeter to extend its range.

Analog Multimeter

- The term "multimeter" refers to an electronic test instrument that, with the flip of a switch, can be set up to measure current, voltage or resistance.

- There are two basic types of multimeters—analog and digital.

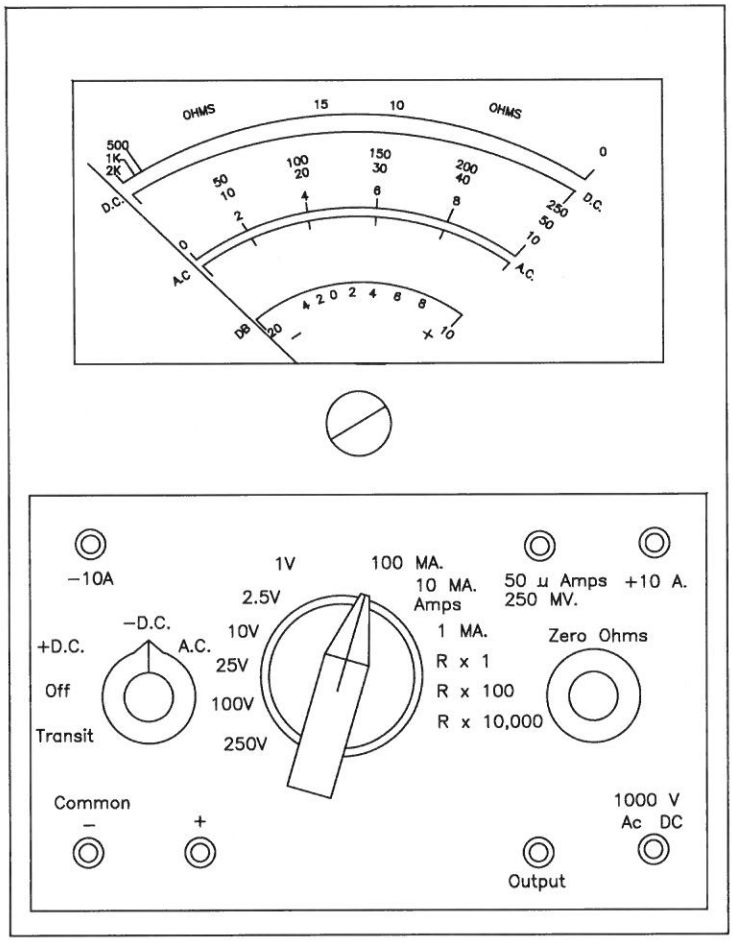

Common Analog Meter

Figure 2-1

- An Analog Meter, as shown in Figure 2-1, has multiple scales printed on its face and is also called a volt-ohm-milliammeter (VOM). The term "analog" means that the meter movement shows gradual increases and decreases as they occur.

- The basic dc meter is called the d'Arsonval meter or a moving coil. With the addition of rectifiers is can also indicate alternating currents and voltages. The schematic symbol for the meter is a small circle with a V, A, Ω, etc. inside of it.

Meter Schematic Symbols

Figure 2-2

- The Analog meter is an electromagnetic device. It consists of the following parts:

  - A horseshoe-shaped permanent magnet
  - A round iron core between the magnet poles
  - A rotary device made of several parts that include a lightweight coil, a pointer attached to the coil, two delicate spiral springs to return the pointer to the zero position, and two precisely ground bearings.
  - A calibrated paper or metal scale
  - A metal or plastic case

- Controls common to all analog multimeters are the function selector, range setting, ohms adjust/ohms zero, and mechanical zero.

- Although the analog multimeter uses the same meter movement to indicate current, voltage, and resistance, a different scale is needed for each function.

- Refer to Figure 2-1. The upper scale is used to measure resistance, while the lower scales are used to measure AC and DC voltage or current.

- Most multimeters, analog or digital, are equipped with a set of meter leads that must be connected to the meter prior to using it. Common lead colors are black and red. (The black lead is negative and the red lead is positive)

Meter Movement Ratings

- Meters movements are rated for current, internal resistance and voltage.

- The full-scale current rating represents the coil current needed to cause the meter to deflect to the maximum value of the scale.

- All basic meter movements have a small amount of internal resistance. The resistance is derived from the small diameter wire used in the coil. The internal resistance of the meter movement has an inverse relationship to the full-scale current rating. The lower the full-scale current rating the higher the internal resistance.

- Most manufacturers specify both the full-scale current rating and the internal resistance rating, however, Ohms Law can be used to determine the voltage rating. The formula $V_m = I_m \times R_m$ is used where V_m represents the voltage across the meter; I_m represents the full-scale current; and R_m represents the internal resistance.

The following is a list of general rules for using an analog multimeter:

- Connect the leads to the meter.

- Set the function switch to the correct position.

- Set the range switch to the correct position.

- Connect the meter to the circuit correctly.

- Locate and read the correct meter scale.

Voltage Measurements

When using an analog multimeter as a voltmeter, several precautions must be observed.

- DO NOT touch the metal probe tips with your fingers. You may get a serious electrical shock.

- OBSERVE POLARITY markings when measuring DC voltage.

- When the function switch is in the +DC position, place the black lead in the Common (-) jack, and the red lead in the (+) jack. When the –DC position is used, the black lead Common (-) is positive.

- Make sure that the voltage to be measured WILL NOT EXCEED the voltage range setting selected.

Function Switch

- In order to measure voltage with an analog multimeter, the function switch must be set to the correct voltage, AC or DC, used in the circuit.

Range Switch

- Select a voltage range that is greater than the expected voltage BEFORE a voltage is actually measured.

- Range switch settings are labeled to indicate the maximum voltage to be measured when the switch is set in that position.

- The maximum voltage will cause a full-scale pointer deflection.

- If the voltage being measured greatly exceeds the range setting of the meter, the meter will be severely damaged.

- The most accurate readings result when the point moves into the middle portion of the scale.

Connecting the Meter

- Voltage measurements are made in parallel with the circuit as shown in Figure 2-3.

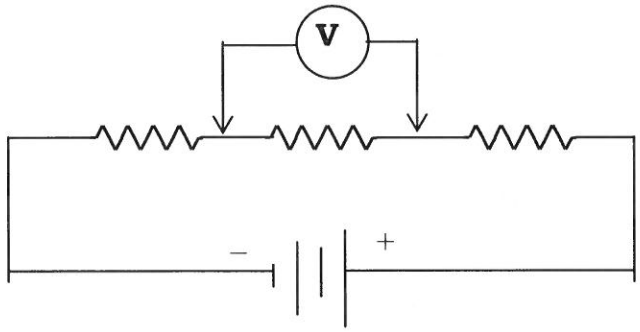

Voltage Measurements

Figure 2-3

- When measuring DC voltage with an analog multimeter, polarity must be observed. This means the negative (black) lead must be connected to the negative side of the battery terminal, and the positive (red) lead must be connected to the positive side of the batter terminal.

- Voltage is measured with circuit power ON.

Voltmeter Multipliers

- A voltmeter's meter internal movement consists of multiplier resistors that are connected in series inside the analog meter. Voltmeter multiplier resistors extend the voltage range of the basic meter movement. They have low tolerances, low temperature coefficients, and very high resistances.

- Figure 2-4 is an example of a voltmeter multiplier.

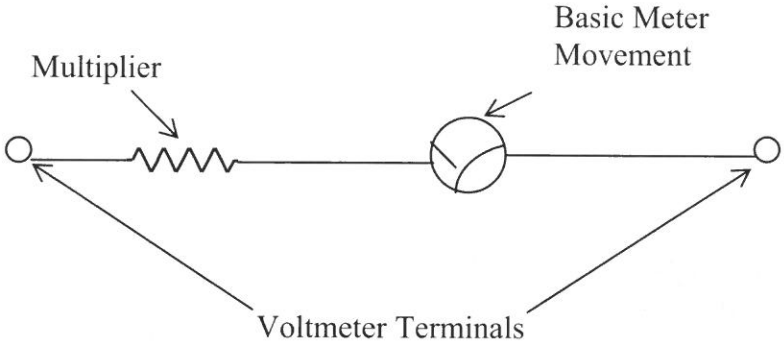

Figure 2-4

Voltmeter Multiplier Calculations

- Using series circuit relationships and Ohm's Law, we can determine the resistance of a multiplier. This is possible because the current through the multiplier (I_{mt}) is the same as the current through the meter (I_m), and the multiplier voltage (V_{mt}) plus the meter-movement voltage (V_m) equals the voltmeter voltage (V_t).

Example: What value multiplier (R_{mt}) is needed to extend a 1mA (I_m), 100Ω meter movement (R_m) to a 10V voltmeter?

$V_m = I_m \times R_m$

Substituting Values

V_m = .001A (1mA) x 100Ω = .1V

V_{mt} = 10V- .1V = 9.9V

$$R_{mt} = \frac{V_{mt}}{I_{mt}}$$

Substituting Values

$$R_{mt} = \frac{9.9V}{.001A} = 9900\Omega$$

NOTE: Refer to Figure 2-4. Imt is equal to Im since the multiplier and the meter movement are in series.

R_{mt} = 9900Ω The value of the multiplier required is equal to 9900Ω

Voltmeter Rating

- An important rating for a multi-range analog voltmeter is its internal resistance. When used as a voltmeter, the analog meters have very high internal resistance. This helps to prevent meter loading, which will be discussed later in this chapter.
- The internal rating of a voltmeter is measured in ohms per volt and indicates the input resistance for each volt of a particular range.
- The ohms per volt rating is also called the "sensitivity" of the meter. It is determined by the full-scale current of the meter movement and can be mathematically expressed as follows:

$$Sensitivity = \frac{1}{full\text{-}scale\ current}$$

Example: Determine the sensitivity of a voltmeter that uses a 40μA meter movement.

$$\text{Sensitivity} = \frac{1}{40\mu A}$$

$$= 25k\Omega/V$$

The sensitivity of the voltmeter is 25kΩ/V

- To determine the input resistance of a voltmeter on a particular range, the following formula can be used:

Input resistance = sensitivity x range

Example: Determine the input resistance of a 3,000Ω/V voltmeter on the 10V range.

Input resistance = 3,000Ω/V x 10V
= 30kΩ

The input resistance on the 10V range is 30kΩ.

Current Measurements

When using an analog multimeter as an ammeter, you must observe several precautions to protect yourself and the equipment.

- DO NOT touch the metal probe tips with your fingers. You may get a serious electrical shock.

- OBSERVE POLARITY markings when measuring DC.

- Make sure the current to be measured WILL NOT EXCEED the range setting selected.

- NEVER connect an ammeter in PARALLEL with a circuit.

- DO NOT attempt to connect an ammeter to a circuit with the power ON. Although power is needed to measure current, insert the ammeter leads in the circuit with the power OFF. Turn the power ON AFTER you connect the meter to the circuit.

Function Switch

- The function switch must be set to make the multimeter function as an ammeter. Some meters have a special setting for extremely small or large current measurements.

Range Switch

- As with the voltmeter, the range settings for current are labeled to indicate the maximum current that can be measured when the switch is set in that position.

- The maximum current will cause full-scale pointer deflection. If the current being measured greatly exceeds the range setting of the meter, the meter will be severely damaged.

- Mid-scale readings are the most accurate

Connecting the Meter

When using the analog meter as an ammeter, it must be connected in series with the circuit as shown in Figure 2-5. The meter actually becomes part of the circuit, and because of the low internal resistance of the ammeter, circuit current will flow through the ammeter. For this reason, ammeters must never be connected across a source of potential (voltage source).

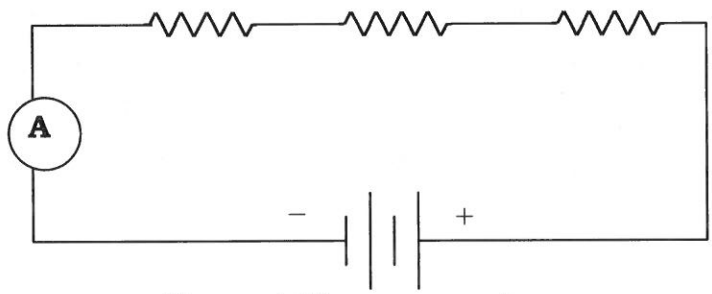

Current Measurements

Figure 2-5

Current Shunts

- A shunt is a resistor of very low resistance connected in parallel with the basic meter movement of a meter. Shunts can be connected to the external contacts of a meter, however they are usually located inside the same housing as the basic meter movement.

- Shunts are usually made from materials with very low temperature coefficients. They are usually precision, low-tolerance resistors.

- Figure 2-6 shows a meter with an ammeter shunt. Shunts extend the range of the basic ammeter movement by diverting most of the current around the meter movement.

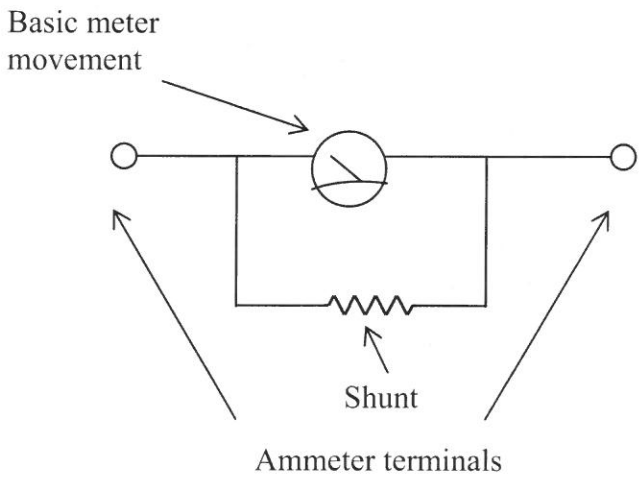

Figure2-6

Current Shunt Calculations

- Examine Figure 2-6. Using Ohm's Law formulas, we can determine the resistance and power dissipation of a shunt.

Example: A 1mA ammeter (I_m) with a 50Ω movement (R_m) is extended to a 1A ammeter. Determine the resistance (R_s) of the required shunt.

$I_s = 1A - .001A(1mA) = .999A$
$V_m = I_m \times R_m$

Substituting Values

$V_m = .001A \times 50\Omega$
$V_m = .05\Omega$
NOTE: Refer to Figure 2-6. Since the shunt and the meter are in parallel, $V_m = V_s$.

$$R_s = \frac{V_s}{I_s}$$

$$R_s = \frac{.05V}{.999A} = .05\Omega$$

Rs = .05Ω

Resistance Measurements

When using an analog multimeter as an ohmmeter, you must observe several precautions to protect yourself and the equipment.

- DO NOT connect an ohmmeter to a circuit with the power ON.

- Do NOT touch the metal probe tips with your fingers. The resistance of your body may cause inaccurate readings.

- Isolate components that are in a circuit.

- Zero the meter before you make a measurement.

- DO NOT leave the function switch set to ohms.

- Function Switch. To measure resistance, set the function switch to the OHMS setting.

- Range Switch. When using the analog multimeter as an ohmmeter, the range switch serves as a multiplier. For example, if the reading on the ohmmeter scale is 50 and the range switch is set to x100, the resistance value is 50x100 or 5,000 (5kΩ).

Zeroing the Meter

- Before the ohmmeter is connected to a circuit to measure any resistance, a procedure called "zeroing the meter" must be done.

- To zero a meter, connect the tips of the test leads together (shorting them) and adjusting the Zero/Ohms Adjust control until the pointer is directly over zero on the Ohms scale.

- The meter must be zeroed every time the range switch setting is changed. If the meter is not zeroed each time the range switch is changed, the readings will be incorrect.

Connecting the Meter

Resistance measurements are made in parallel with the component as shown in Figure 2-7 below. If the component is in circuit, remember that the power to the circuit must be disconnected.

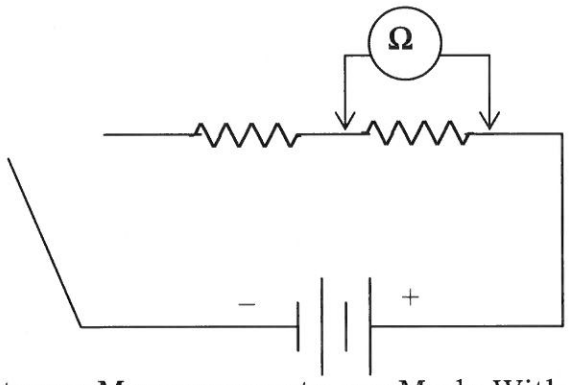

Resistance Measurements are Made With Power Off

Figure 2-7

- If an ohmmeter is connected to a component that has other components connected in parallel with it, the reading will be incorrect. The meter will read the total resistance of all the components.

- To get the correct resistance reading, one lead of the component must be disconnected from the circuit. Disconnecting one lead isolates the component from the effects of the other components and gives you a true reading.

Activity 1

Analog Multimeters

Determine whether each statement is true or false.

1. The term "multimeter" refers to an electronic device that is used to measure voltage only.

2. There are two basic types of multimeters—analog and digital.

3. An advantage of the analog multimeter is that the same scale can be used to measure current, voltage, and resistance.

4. When measuring DC voltage, polarity must be observed.

5. Voltage measurements are made in parallel with the circuit.

6. Voltage is measured with circuit power off.

7. Current measurements are made in series with the circuit.

8. Resistance measurements are made with power on.

9. A shunt is a resistor of very low resistance, and it is connected in parallel with the basic movement inside of the meter.

10. Mid-scale readings are the most accurate readings when using an analog meter.

Answer the following questions.

11. A 100ma, 1200Ω meter movement is extended to 1mA. Determine the resistance of the shunt for the 1mA range.

12. A 150μA, 200Ω meter movement is used in a 50V voltmeter. Determine the resistance of the multiplier.

13. What is the sensitivity of a voltmeter that uses a 25μA meter movement?

14. What is the internal resistance of a 250-V voltmeter that uses a 50μA meter movement?

Digital Multimeter

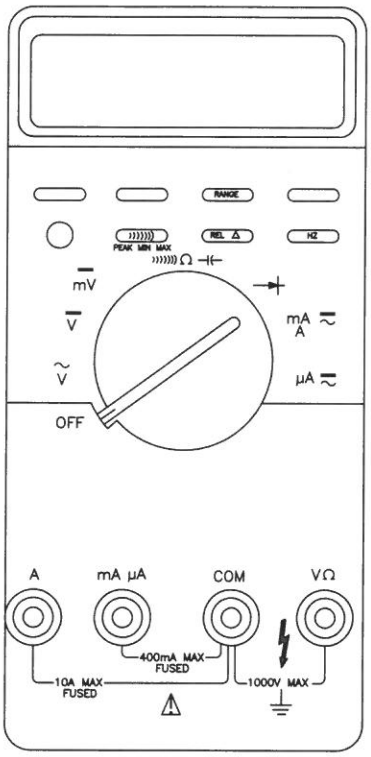

Common Digital Multimeter

Figure 2-8

Analog Vs Digital

- Figure 2-8 is an example of a hand-held digital multimeter. Although digital multimeters perform the same function as analog multimeters, the operation of the two types of meters is very different.

- Analog multimeters use meter movement and resistor arrangements to show electrical quantities on a calibrated scale.

- Digital multimeters use complex electronic circuitry and advanced integrated circuits to convert the electrical quantities of current, voltage, and resistance into digital form. The digital data is then displayed directly in numerical form.

- Digital multimeters must be connected to a 110VAC receptacle or a battery pack.

- Analog multimeters normally require internal power only for the ohmmeter function.

Advantages of Digital Multimeters

- Digital multimeters are more accurate. Most digital meters will carry fractional values to three decimal places and are accurate to within .1 percent of the actual reading.

- Digital multimeters are easy to read and to use. You don't have to worry about parallax error, reading the wrong scale, or misinterpreting the scale divisions when using a digital multimeter.

- Digital multimeters have very high input resistance in the voltmeter function. The ohmmeter function of the digital multimeter uses very low current as compared to analog meters. This feature extends the life of the internal battery of a hand-held digital multimeter.

- Digital multimeters will tolerate most common errors with damage to the meter; however, they can be damaged if the maximum input levels are exceeded. It is very important to know the limits of the meter before attempting to use it by reading the operator's manual.

Digital Multimeters are "user friendly."

- If you attempt to measure a voltage or current which exceeds the range setting, the meter will simply give you and "over-range" indication. If you are using an auto-ranging meter, the meter will select the correct range for you.

- If you are measuring DC and forget to observe polarity, the digital multimeter will give you the reading anyway and place a minus sign (-) in front of the reading. This indicates you need to reverse the leads.

The following are general rules for using a digital multimeter, and they are the same for each function.

- Connect the leads to the meter.

- Set the function switch to the correct position.

- Connect the meter to the circuit correctly

- Take the reading from the display.

Voltage Measurements

- Although digital multimeters are extremely user-friendly, you must still observe several precautions to protect yourself and the equipment when using a digital multimeter as a voltmeter.

- DO NOT touch the metal probe tips with your fingers. You may get a serious electrical shock.

- OBSERVE POLARITY markings when measuring DC voltage.

- Make sure that the voltage to be measured WILL NOT EXCEED the voltage range setting selected.

- Voltage measurements are made with power ON.

Function. In order to measure DC voltage with a multimeter, the function switch must be set to DC. To measure AC voltage, the function switch must be set to AC.

Range. Despite the fact that digital voltmeters have over-range protection, the range switch should always be set to the proper position.

Connecting the Meter

- When using the digital multimeter as a voltmeter, connect the meter in parallel with the circuit.

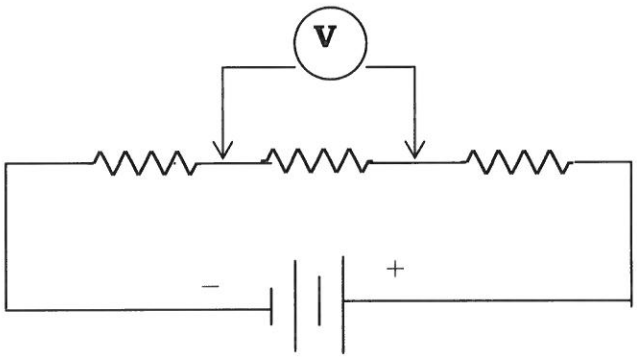

Voltage Measurements

Figure 2-9

- To obtain a reading from the meter, simply observe the digital display and take the reading directly.

Current Measurements

- Although digital multimeters are extremely user-friendly, you must still observe several precautions to protect yourself and the equipment when using a digital multimeter as an ammeter.

- DO NOT touch the metal probe tips with your fingers. You may get a serious electrical shock

- OBSERVE POLARITY markings when measuring DC.

- Make sure the current to be measured WILL NOT EXCEED the range setting selected.

- NEVER connect an ammeter in PARALLEL with a circuit.

- DO NOT attempt to connect an ammeter to a circuit with the power ON. Although power is needed to measure current, insert the ammeter leads in the circuit with the power OFF. Turn the power ON AFTER you connect the meter to the circuit.

- ***Function.*** To measure DC or AC with a digital multimeter, the function switch to function as an ammeter.

- ***Range.*** The rules for setting the range switch are the same as those for the voltmeter. Even though the digital multimeter has an over-range function, it is still a good practice to remember that the range switch settings indicate the maximum current you can measure with the switch set in that position.

Connecting the Meter

When using the digital multimeter as an ammeter, it must be connected in series with the circuit as shown in Figure 2-10 below.

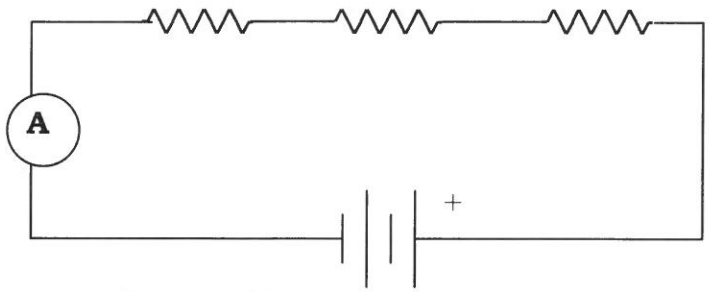

Current Measurements

Figure 2-10

- The meter actually becomes part of the circuit. Because the ammeter function has low internal resistance, the circuit current will flow through the ammeter.

- Reading the display for current is done the same way as it is for voltage. Simply take the reading from the display. Just remember that the numbers now represent amps instead of volts.

Resistance Measurements

When using an analog multimeter as an ohmmeter, you must observe several precautions to protect yourself and the equipment.

- DO NOT connect an ohmmeter to a circuit with the power ON.

- Do NOT touch the metal probe tips with your fingers. The resistance of your body may cause inaccurate readings.

- Isolate components that are in a circuit.

Function. Set the function switch to function as an ohmmeter.

Range. The range switch has the same purpose as it does for the voltmeter and the ammeter. The range switch settings indicate the maximum resistance the meter will read in that setting.

Connecting the Meter

- Resistance measurements are made in parallel with the component as shown in Figure 2-11. However, if the component is in a circuit, remember that the power to the circuit must be disconnected.

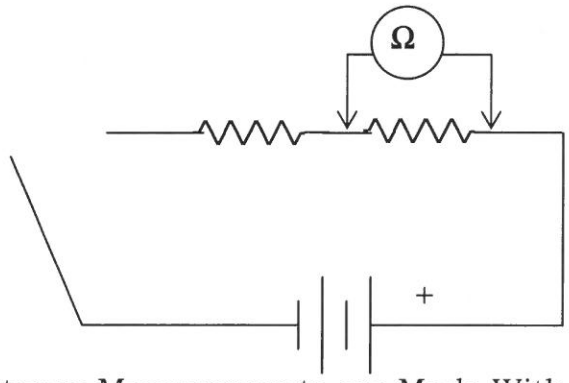

Resistance Measurements are Made With Power Off

Figure 2-11

- Digital ohmmeters do not need to be "zeroed" before each use, as do analog ohmmeters.

- If you connect an ohmmeter to a component that has other components connected in parallel with it, the reading will be incorrect. The meter will read the total resistance of all the components. To get the correct resistance reading, disconnect one lead of the component from the circuit.

- Take the reading directly from the display. Just remember that the numbers now represent ohms.

Meter Loading

- When circuit currents or voltages change their value as a result of connecting a meter to the circuit, the effect is called meter loading. Significant meter loading can occur when component tolerances cause circuit current or voltages to change their value.

- AC meters are more susceptible to load a circuit than are DC meters. This is because AC voltmeters usually have less input resistance than DC voltmeters with the same meter movement rating.

Activity 2

Digital Multimeters

Complete the following statements.

1. Most digital meters will carry fractional values to _____ decimal places.

2. Digital multimeters have very (high/low)_____ input resistance in the voltmeter function.

3. Voltage measurements are made with power _____.

4. Current measurements are made with power _____.

5. Resistance measurements are made with power _____.

6. When using the digital multimeter as a voltmeter, connect the meter in _____ with the circuit.

7. When using the digital multimeter as an ammeter, connect the meter in _____ with the circuit.

8. Digital ohmmeters do not need to be _____ before each use, as do analog ohmmeters.

9. When using the digital multimeter as an ohmmeter, _____ components that are in a circuit to get a more accurate reading.

10. Resistance measurements are made in _____ with the circuit.

The purpose of this chapter is to provide a general understanding of the subject areas addressed. For more information on the topics covered in this unit, refer to the reference books and other study materials listed in the Study Guide for the Basic Electronics Test.

SUMMARY

1. *The term "multimeter" refers to an electronic test instrument that with the flip of a switch, can be set up to measure current, voltage or resistance.*
2. *There are two basic types of multimeters—analog and digital.*
3. *Voltage measurements are made in parallel with power ON.*
4. *Observe polarity when measuring DC voltages.*
5. *When using an analog meter, adjust the range switch so that readings are taken from mid-scale.*
6. *Current measurements are made in series with power ON.*
7. *Resistance is measured in parallel with power OFF.*
8. *Isolate the component from the effect of other components when measuring resistance.*
9. *When using an analog meter to measure resistance, the meter must be zeroed before each measurement.*
10. *Do not touch the probe tips when making any measurements.*

Chapter 2 Self Test

Answer the following questions.

1. The term "analog" means the meter movement shows gradual _____ as they occur.

    a. Increases
    b. Decreases
    c. Both a and b
    d. None of the above

2. The upper scale in an analog multimeter is used to measure _____.

    a. resistance
    b. voltage
    c. current
    d. all of the above

3. The black meter lead of a multimeter is _____ while the red meter is _____.

    a. positive, negative
    b. negative, positive

4. Voltmeter multiplier resistors _____ the voltage range of the basic meter movement.

    a. extend
    b. restrict

5. What is the sensitivity of a voltmeter that uses 8μA meter movement?

    a. 1.25Ωk/V
    b. 12.5kΩ/V
    c. 125kΩ/V

6. The range switch of a multimeter indicates the _____ current, voltage, or resistance that can be measured.

    a. minimum
    b. maximum

7. For an analog multimeter _____ readings are the most accurate.

8. Digital multimeters must be connected to a _____ receptacle or a _____.

9. If a voltage or current measurement exceeds the range setting for a digital multimeter, the meter will give a/an _____ indication.

10. If you are measuring DC with a digital multimeter and forget to observe polarity, the meter will place a _____ in front of the reading.

Chapter 2 Answer Key

Activity 1

1. F
2. T
3. F
4. T
5. T
6. F
7. T
8. F
9. T
10. T
11. 133.3Ω
12. 333.133kΩ
13. 40kΩ/V
14. 5MΩ

Activity 2

1. Three
2. High
3. On
4. On
5. Off
6. Parallel
7. Series
8. Zeroed
9. Isolate
10. Parallel

Unit 2 Self Test

Answer the following questions.

1. The term "analog" means the meter movement shows gradual _____ as they occur.

   a. Increases
   b. Decreases
   c. Both a and b
   d. None of the above

2. The upper scale in an analog multimeter is used to measure _____.

   a. resistance
   b. voltage
   c. current
   d. all of the above

3. The black meter lead of a multimeter is _____ while the red meter is _____.

   a. positive, negative
   b. negative, positive

4. Voltmeter multiplier resistors _____ the voltage range of the basic meter movement.

   a. **extend**
   b. restrict

5. What is the sensitivity of a voltmeter that uses 8μA meter movement?

   a. 1.25Ωk/V
   b. 12.5kΩ/V
   c. 125kΩ/V

6. The range switch of a multimeter indicates the _____ current, voltage, or resistance that can be measured.

    a. minimum
    b. maximum

7. For an analog multimeter, **mid-scale** readings are the most accurate.

8. Digital multimeters must be connected to a **110VAC** receptacle or a **battery pack**.

9. If a voltage or current measurement exceeds the range setting for a digital multimeter, the meter will give a/an **over range** indication.

10. If you are measuring DC with a digital multimeter and forget to observe polarity, the meter will place a **minus sign** in front of the reading.