Chapter 1

INTRODUCTION TO ELECTRONICS

OUTLINE

- Historical Electronic Discoveries
- Basic Atomic Theory
- Conductors, Insulators, and Semiconductors
- Electrical Prefixes and Scientific Notation
- Scientific Calculators
- Ohms Law
- Power, Energy and Time
- DC Circuits
- Conductor Wire Specifications
- AC Circuits

OBJECTIVES

Given various electronic devices, symbols, and diagrams, you will be able to accomplish the following objectives:

- Identify significant events in the history of electronics.
- Identify various elements of atomic theory.
- Convert electrical quantities from one subunit to another.
- Use the proper keystrokes on an electronic calculator to apply a formula.
- Calculate voltage, current, power, and resistance for a series, parallel, or series-parallel circuit.
- Describe the relationship between key AC terms such as phase, frequency, period, and amplitude.
- Calculate peak, peak-to-peak, effective and average voltages.
- Define capacitance and capacitive reactance, and their relationship to frequency.
- Calculate true power, apparent power, and power factor.
- Identify the function and type of various frequency sensitive filters.

- Define impedance and impedance matching
- Describe the effects of mismatch on the transfer of energy.

Historical Electronic Discoveries

Radio

- De Forest invented the audion vacuum tube in 1906. The term audion related to its first use, to make sounds (audio) louder.
- Electronic devices appeared in the average home with the first commercial radio station in 1920.
- The first radio station, KDKA, was born in Pittsburgh, PA. Half of the homes in the United States contained radios by 1937.

Semiconductors

- The term semiconductor applies to both transistors and diodes alike. It is also used to describe special types of electronic devices.
- The word semiconductor is derived from the fact that germanium and silicon materials have electrical properties that operate between a conductor and an insulator in the opposition to current flow.
- In 1833, Michael Faraday, an English scientist, made a contribution to the crystalline amplifier by working with silver sulfide. He discovered that the resistance of silver sulfide varies inversely with the temperature. This discovery was considered noteworthy since most conductors offer an increase in resistance along with an increase in temperature.

Television

- Commercial television began around 1946 as an outgrowth of audion vacuum tube technology.
- The origin of television is quite interesting because it was developed over a period of years by a number of individuals.
- Some scientists and inventors contributed to the development of electronic "pictures," while others contributed to the development of scanning devices.
- Until the development of the cathode ray tube, commonly known as the CRT, the picture quality was very poor.

- Paul Nipkow invented mechanical scanning in 1884. Vladimir Zworykin, a Russian who studied at St. Petersburg Technical Institute, developed the CRT. His invention made possible television, as we know it today.

COMPUTERS

- The digital computer has its origin from the Orient.

- The abacus, a manually operated digital computer, was used in ancient civilizations and is still in operation to this day in the Orient.

- A Frenchman named Blaise Pascal invented the first adding machine in 1642.

- Then in 1662, an Englishman, Sir Samuel Morland, expanded on Pascal's invention and developed a more compact device that could multiply, add, and subtract.

- In 1682, a German inventor, Wihelm Liebnitz perfected a machine, which not only performed all the basic operations.

- The first vacuum tube computer was built in 1943 at the University of Pennsylvania. The first commercial vacuum tube computers were very large and expensive and generated much heat because of the many vacuum tubes they used.

TRANSISTORS (SOLID STATE DEVICES)

- As mentioned earlier, Michael Faraday, an English scientist, discovered that silver sulfide had a negative temperature coefficient in 1833.

- In June 1948, John Bardeen, William Shockley, and W.H. Brittain shared an office and worked together at Bell Laboratories in New Jersey.

- These three scientists developed the crystal amplifier (the transistor's original name). Their discovery led to a Nobel Prize for each.

- Semiconductor technology is called "solid state." This means that the materials are solid as opposed to the vacuum that separates the electrodes in a vacuum tube.

- Present day computers and space communications devices are outgrowths of the development of a crystal that would amply and switch.

INTEGRATED CIRCUITS

- The integrated circuit, commonly known as the IC, is a single, monolithic chip made of semiconductor material.

- Shortly after the introduction of the transistor, Jack S. Kilby of Texas Instruments fabricated the first IC. By using diffusion and deposition techniques, he was able to make both active and passive circuit components.

- A short time after Kilby's success, Robert Noyce made a complete circuit on a single chip. Noyce's accomplishments led the way to the modern ICs of today.

- Integrated circuits (ICs) are complex combinations of several kinds of devices on substrate or a tiny piece of silicon. ICs contain thousands of transistors, diodes, resistors, and capacitors in various arrangements

- The advantages of ICs are their low costs, high performance, good efficiency, and small size. ICs are more reliable than an equivalent circuit built from separate parts.

MICROPROCESSORS

- The Intel Corporation in California developed the first commercially available microprocessor, the Intel 4004, in 1971. All of the circuitry for the main processing unit of a computer was placed on a single silicon chip!

- Intel followed this by the development of the Intel 8080 microprocessor in 1974. The Intel 8080 was instrumental in the construction of the first commercially available microcomputer system, the Altair 8800 in 1975.

- The popularity of microcomputer did not explode until the development of the Apple II by Steve Jobs and Steve Wozniak in 1978, and the IBM Personal Computer in 1981.

- A microprocessor is the equivalent of millions of transistors, and contains most of the circuitry of a computer on a single IC. It

contains four main parts: memory, arithmetic logic unit (ALU), control unit, and input/output ports.

PAGERS AND CELLULAR TELEPHONES

- The first commercial pagers were introduced in 1962.
- Early models signaled the user to find a telephone and call a prearranged number. More recent models can deliver an alphanumeric message and carry a reply.
- Even though pagers are limited in function, they still remain very popular. This is due largely to their low cost and small size.
- In 1977, the cellular telephone system entered its testing phase.
- The world's first cellular radio service was installed in Japan in 1979, and was followed in 1983 by North American services.
- Instead of using a single powerful transmitter located on a tall tower for wide coverage, the power of transmitters used in cellular systems are kept deliberately small so that the coverage area, called a cell, is also kept small.
- The use of small cells allows the frequencies to be reused at short distances.

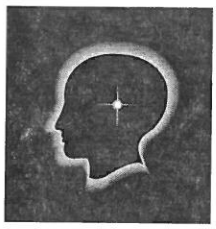

Activity 1

Historical Electronic Discoveries

Write the definition for each of the terms listed below.

1. Microprocessor:

2. Integrated Circuit:

Determine whether each statement is true or false.

3. The first commercial radio station was established in 1920.

4. In 1950, the first vacuum-tube computer was built at the University of Tennessee.

5. The Intel Corporation developed the integrated circuit in 1958.

Basic Atomic Theory

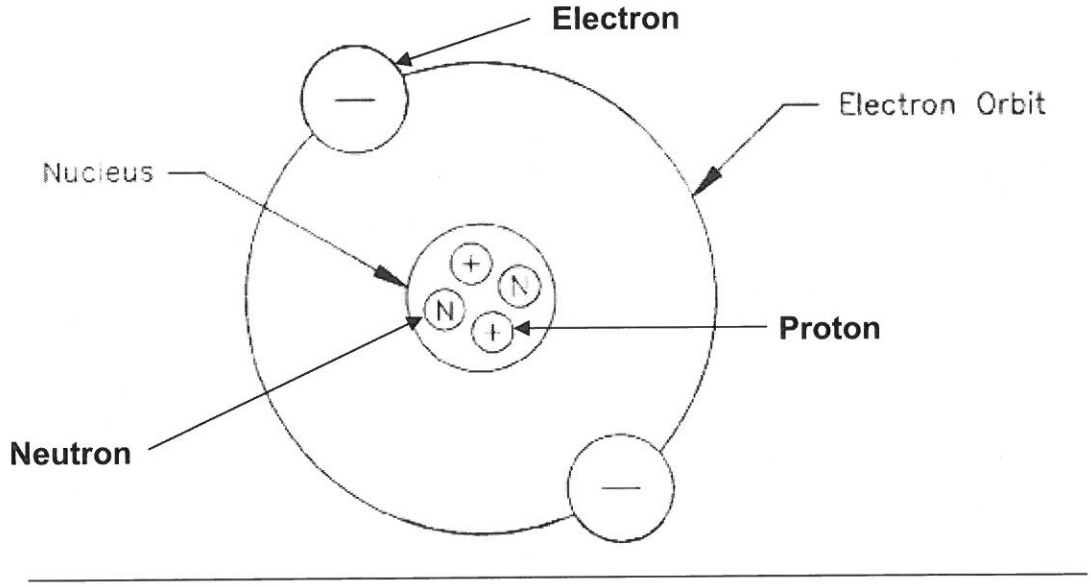

Figure 1-1

THE ELECTRON

- Electrons orbit outside and around the center (or the nucleus) of an atom.

- All Electrons have a negative electrical charge.

- An orbit is the path of an electron around an atomic nucleus. Orbits are also called shells. The valence orbit, or the orbit that is farthest away from the nucleus is the main interest in electronics.

- Electrons contained in the valence orbit are called valence electrons.

- Valence electrons are important because they are the ones that enter into chemical or electrical combinations with other atoms. When an atom contains eight valence electrons it is considered stable and is least likely to be influenced to leave the valence orbit of the parent atom.

THE PROTON

- The proton is contained inside the nucleus of the atom and therefore has no orbit.

- The proton has a positive electrical charge. Because protons and electrons are charged particles, they form an electric field of force within the atom. These charges are always pulling and pushing one another, and this action produces energy in the form of movement.

THE NUCLEUS

- The center of the atom is called the nucleus.

- It is constructed of protons and *neutrons* (*neutrons* are uncharged particles that are permanent parts of the nucleus. Their mass is nearly equal to that of the proton).

- Because there is no negative charge inside the nucleus to cancel out the positive charge of the proton, the nucleus has an overall positive potential.

THE LAW OF ELECTRICAL CHARGES

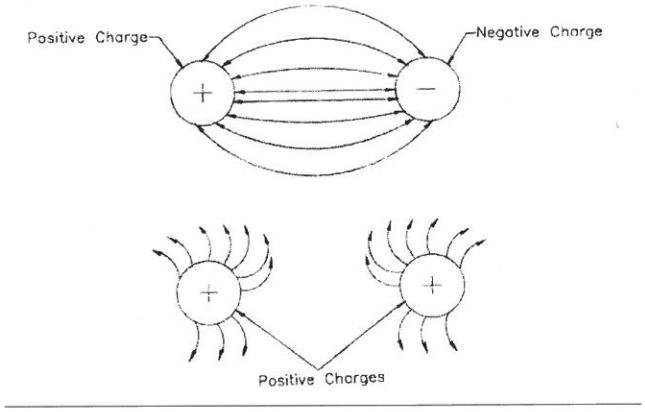

Figure 1-2

- Particles with like charges repel each other

- Particles with unlike charges attract each other.

ELECTROSTATIC FIELDS

- An electrostatic field is a force that exists between any two charged bodies or objects.

- The electrical charge of an electron is equal but opposite to the positive charge of a proton. The charges on an electron and a proton are called electrostatic charges.

- The lines of force associated with each particle produce electrostatic fields.

- The charged particles interact through the electrostatic fields to attract or repel one another. If two objects have the same charge, the generated force is repulsion. If the two objects have unlike charges the generated force is attraction.

Activity 2

Basic Atomic Theory

Determine whether the following statements are true or false.

1. Electrons are much heavier in weight than protons. _____
2. Protons orbit outside and around the center of the atom. _____
3. The nucleus of an atom has an overall neutral charge. _____
4. An electron has a negative charge. _____
5. Neutrons are located inside of the nucleus. _____
6. Particles with like charges attract each other. _____
7. An electrostatic field is a force that exists between any two charged bodies or objects. _____

Conductors, Insulators, and Semiconductors

CONDUCTORS

- Regarding the way they conduct electricity, all elements fall into one of three categories: conductors, insulators, or semiconductors.

- Conductors have less than four electrons in their valence shell and they offer very little opposition to current flow.

- Conductors form the fundamental paths for electronic circuits.

- Copper, aluminum, and silver are the most common examples of conductors, however, copper is the most widely applied.

- Aluminum is less expensive than copper however is difficult to solder and tends to corrode quickly when brought into contact with other metals.

- Silver is the best conductor of the three because it has the least resistance to current, however it is very costly. Gold is also a very good conductor.

INSULATORS

- Insulators are materials that offer high resistance to current flow. They have five or more valence electrons.

- Insulators are poor conductors and are mainly used to block or prevent the transfer of electricity or heat.

- Practically all insulators used in electronics are compounds (combinations of two or more different kinds of atoms). Common examples are rubber, plastic, glass, and ceramic.

SEMICONDUCTORS

- Semiconductors are materials whose electrical characteristics fall between those of conductors and insulators. They are neither good conductors nor insulators. Semiconductors have four valence electrons.

- Silicon and germanium are to examples of semiconductor materials.

- Semiconductors are used extensively to make transistors, diodes, and integrated circuits.

- All semiconductors have a negative coefficient of resistance.

Activity 3

Conductors, Insulators, and Semiconductors

Complete the following statements.

1. Conductors are materials that offer _____ (high or low) resistance to current flow.

2. Insulators are materials that _____ (aid or oppose) current flow.

3. Semiconductors contain _____ valence electrons.

4. Identify the materials below with their associated category (Conductor, Insulators, Semiconductors)

   a. Rubber _____

   b. Copper _____

   c. Glass _____

   d. Silicon _____

   e. Silver _____

   f. Germanium _____

5. The outermost shell of an atom is called the _____ shell.

Electrical Prefixes and Scientific Notation

Electrical Prefixes

In order to gain a deeper insight into electronics, it is necessary to know certain rules of mathematics and metric prefixes for the measurement of electrical quantities.

- Electrical prefixes are used to simplify calculations by providing a convenient method of expressing very large or very small numbers

- Electrical prefixes and symbols are commonly used in electricity. Figure 1-3 represents a table of common electrical prefixes. (Note all numbers are expressions of the powers of ten)

Number	Power of Ten	Prefix	Symbol
1,000,000,000	10^9	Giga	G
1,000,000	10^6	Mega	M
1,000	10^3	Kilo	k
1	10^0		
0.001	10^{-3}	Milli	m
0.000001	10^{-6}	Micro	μ
0.000000001	10^{-9}	Nano	n
0.000000000001	10^{-12}	Pico	p

NOTE: 10^0 has no prefix or symbol because it represents units

Figure 1-3

SCIENTIFIC NOTATION

- Through the use of exponents, scientists have developed a system for expressing very large and very small numbers called scientific notation.

- All numbers written in scientific notation have the form $M X 10^{\pm n}$ where M is any number having one non-zero figure to the left of the decimal point, and n is any number.

There are two rules for expressing a number in scientific notation:

- Determine M by moving the decimal point, to the left or to the right, until only one none-zero digit lies to the left of the decimal point.

- Determine n by counting the number of places the decimal point has been shifted. N will be positive if the decimal point has been shifted to the left, and negative if the shift has been to the right.

Converting Base Units to Prefixes

Example: Write 2 amps in equivalent milliamp form

- Rewrite the prefix as the power of 10 it represents.

$$\mathbf{2\ amps = ?\ x\ 10^{-3}\ amps}$$

- Move the decimal point of the original number to equal the sign and numerical value of the exponent

$$2\ \text{amps} = 2000 \times 10^{-3}\ \text{amps}$$

- Express the answer using the prefix and the original unit of measure.

2 amps = 2000 x 10^{-3} amps = 2000 milliamps or 2000mA

Converting Prefixes To Base Units

Example: Write 2kΩ in equivalent Ohms form

- Express the prefix as a power of ten

$$2k\Omega = ?\text{ base units}$$
$$2k\Omega = 2 \times 10^3 \text{ Ohms}$$

- Move the decimal the number of spaces equal to the exponent (right if the exponent is positive and left if the exponent is negative).

$$2{,}000 \times 10^0$$

- Simplify.

$$2{,}000 \times 10^0 = 2{,}000$$

Note: Remember that 10^0 is equal to 1.

Converting From Prefix To Prefix

- To convert to an exponent that is more positive, the decimal must be moved to the left.

- To convert to an exponent that is more negative, the decimal must be moved to the right.

- To determine how many places to move the decimal, the difference between the two exponents must be determined.

Example: 20,000k = ? M

$$20{,}000 \times 10^3 = ? \times 10^6$$

$$20{,}000 \times 10^3 = 20 \times 10^6 = 20M$$

Note: As the exponent got larger (from 3 to 6) the coefficient got smaller (20,000 to 20). As one gets larger, the other will always get smaller.

Activity 4

Electrical Prefixes and Scientific Notation

Convert the following units numbers to numbers with electrical prefixes.

1. 3,000 = _____k
2. 0.015 = _____m
3. 750 = _____k
4. 0.000000005 = _____p
5. 4,200,000 = _____M
6. 3,000,000,000 = _____G
7. 0.0000015 = _____n
8. 0.000082 = _____μ

Convert the following electrical prefix numbers back to units numbers

1. 25k = _____
2. 34.1m = _____
4. 5.78M = _____
5. 0.75k = _____

Convert the following electrical prefixes to another electrical prefix.

1. 2,000m = _____k
2. 10μ = _____ p
3. 2,500p = _____μ
4. .5000k = _____m

Scientific Calculators

Basic Operations

Figure 1-4

Figure 1-4 is photocopy of a typical scientific calculator. Use of a scientific calculator in this course of study is vital, as we will calculate using exponents, reciprocals, powers and roots, logarithms, and other scientific and electrical units.

Key functions

Below is a list of some common key functions that we will use in this course. (*The keys represented will vary depending on the manufacturer type and model; however, the functions will remain the same.)*

- π - Pi. Enters the value of pi, the ration of the circumference of a circle to its diameter, in the display.

- 1/x – Reciprocal. Computes the reciprocal of the number currently displayed.

- X^2 - Square. Computes the square of the number currently displayed.

- $\sqrt{X}$ - Square Root. Computes the square root of the number currently displayed.

- 2nd – Second. Enables functions printed above the function keys.

- EE or EXP – Exponent. Enters exponent values. You can also enter exponents by using the 2nd SCI key to set a scientific display format.

- +/- Plus/minus. Allows you make the exponent value negative.

- HYP – Hyperbolic. Causes the legends of the SIN, COS, and TAN to change to sinh, cosh, and tanh.

- SIN – Sine. Computes the sine of an angle.

- COS – Cosine. Computes the cosine of an angle.

- TAN – Tangent. Computes the tangent of an angle.

- LOG – Logarithm to base 10. Computes the logarithm to base 10 of the number currently displayed.

Basic Calculations

Example 1: Add 15kΩ + 30MΩ

- Press the On/C or CE/C key twice to ready the calculator for new operation.

- Press the 2nd key. Next, press the SCI key. This enables the scientific display format. (*If you are using a TI-30Xa, SCI is above the number 5 key.)*

- Enter the number 15 into the calculator. Press the EE key. Enter 3.

- Press the plus key.

- Enter the number 30 into the calculator. Press the EE key. Enter 6.

- Press the equal key.

- Notice the sum is equal to **3.0015^{07}.**

- This value represents scientific notation and would be expressed as **3.0015×10^{7}.**

- Move the decimal to the left or the right to obtain the nearest electrical prefix.

- In this case, we would move the decimal one place to the right to represent 10^6, or *Mega*. The answer would be expressed as **30.015MΩ.**

Example 2: Add 5mA + 100µA

- Press the On/C or CE/C key twice to ready the calculator for another operation.

- Press the 2nd plus the SCI key. This enables the scientific display format. (*If you are using a TI-30Xa, SCI is above the number 5 key.)*

- Enter the number 5 into the calculator. Press the EE key. Press the +/- key and enter 3. The number 3 should now have a minus sign before it.

- Press the plus key.

- Enter the number 100 into the calculator. Press the EE key. Press the +/- key and enter 6. The number 6 should now have a minus sign before it.

- Press the equal key.

Notice the sum is equal to **5.1^{-03}.** This value represents scientific notation and would be expressed as **5.1 x 10-3.** Since 10^{-3} represents the electrical prefix *milli*, there is no need for any further conversion. The answer would be expressed as **5.1mA.**

Ohms Law

- Ohm's Law states that the current in a circuit will change in direct proportion to the applied voltage and will change in inverse proportion to the resistance of the circuit.

- As mentioned earlier, Ohm's Law was originally stated as E=IR with "E" meaning "Electromotive Force. Recently, the letter "V" has been substituted for "E." There are interchangeable in contemporary usage.

- Ohm's Law is normally expressed using formulas. The formulas are as follows:

$Resistance\,(R) = \dfrac{voltage(E)}{current(I)}$, or $R = \dfrac{E}{I}$
$Current\,(I) = \dfrac{voltage(E)}{resistance(R)}$, or $I = \dfrac{E}{R}$
$Voltage(E) = current\ (I)$ x $resistance\ (R)$, or $E = IR$

Figure 1-5

OHMS LAW MEMORY AID FOR FORMULAS

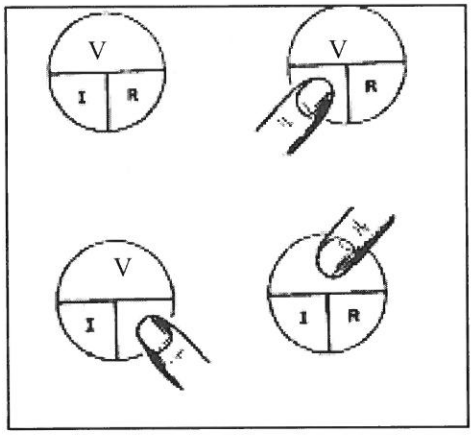

Figure 1-6

Place your finger on the unknown value and the remaining two letters will give the formula to use for finding the unknown value.

POWER FORMULAS

Power is equal to current times voltage, as follows:

$$Power\,(P) = current\,(I)\ x\ voltage\,(E)\text{, or } P = IV$$

Ohm's Law and the power formula may also be combined to calculate power when the resistance and either current or voltage is known. When voltage and resistance are known:

$$P = \frac{V^2}{R}$$

When current and resistance are known:

$$P = I^2 R$$

When only power and voltage are known we can solve for current by rearranging the power formula:

$$Current\,(I) = \frac{power\,(P)}{voltage\,(V)}\text{, or } I = \frac{P}{V}$$

Power, Energy, and Time

- Power is defined as the rate of doing work. Of course, the amount of power required to accomplish a certain amount of work depends on how much time it takes to do the work.

- Work is defined as a force moving through a distance.

- The ability to do work is called energy.

- The words work and energy are so closely related that the same abbreviation, "W," is used for both terms.

- Although the watt is the unit of measure for power, the watt actually represents one joule per second (J/s). One watt second is equal to 1 J/s.

- The relationship between power, time and energy (work) in shown in the formula below.

$$Power\ (P) = \frac{Energy\ (W)}{Time\ (t)}$$

Or Rearranged

$$W = P \times t$$

- As you study electronics, you will discover that several symbols in electronics are used to represent more than one thing. Although the symbol "W" is used in this unit to represent energy and power, the two terms have two entirely different meanings.

POWER AND EFFICIENCY

- Efficiency refers to the process of converting various forms of energy into a form that is usable to us.

- There is no electrical conversion process that is 100% efficient. In other words, not all of the energy put into a device is converted into a usable form of energy that we desire. Some of the energy is dissipated in the form of heat energy or core loss.

- Efficiency is always expressed as a percent.

- The relationship between efficiency and power is expressed in the formula shown below.

$$\% \, eff = \frac{P_{out}}{P_{in}} \, x \, 100$$

or Rearranged

$$P_{in} = \frac{P_{out}}{\% \, eff} \, x100$$

DC Circuits

Circuit Configurations

The three basic circuit configurations are the series, parallel, and series-parallel circuits.

Series Circuits

The identifying feature of a series circuit is that there is only one path for current flow. Figure 1-7 is a series circuit. This is the first important thing to remember about series circuits – current is the same at all points throughout the circuit.

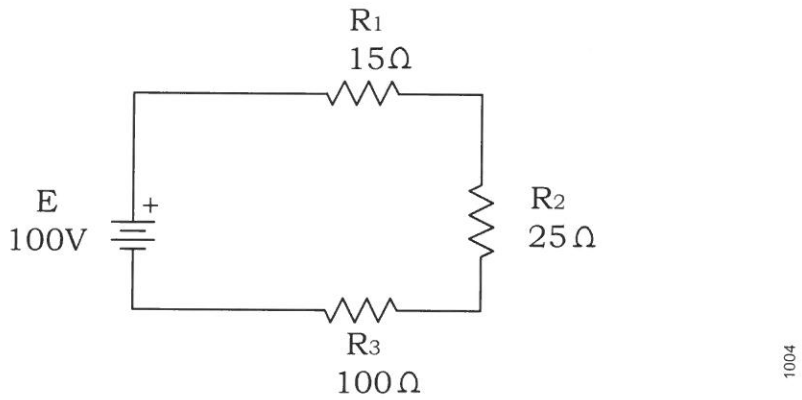

Figure 1-7

- Current Calculations

$$I = \frac{V}{R}$$

NOTE: The current (I) is the same value for each resistor in a series circuit, regardless of the size of the resistor.

- Resistance Calculations

$$R = \frac{V}{I}$$

NOTE: The total resistance (R_T) of resistors in series equals the sum of their individual resistance values.

- Voltage Calculations

$$V = IR$$

NOTE: The applied voltage (V) from a battery or other DC power source is always equal to the sum of the voltage drops across all series resistors in the circuit.

- *Power Calculations*

$$P = IV \qquad P = \frac{V^2}{R} \qquad P = I^2 R$$

- ***Exercise**: Using the circuit values in Figure 1-7, solve for current, resistance, voltage and power.*

- ***Step 1**. Solve for Total Resistance R_T.*

$R_T = R_1 + R_2 + R_3$.

Substituting values

$R_T = 15\Omega + 25\Omega + 100\Omega$

$R_T = 140\Omega$

Step 2: *Solve for Total Current I_T*

$$I_T = \frac{V}{R}$$

Substituting values

$$I_T = \frac{100V}{140\Omega}$$

$I_T = .714A$ or $714mA$

Step 3: *Solve for Individual Voltage Drops*

$V = IR$

Substituting Values

$V_{R1} = .714A \times 15\Omega$

$V_{R1} = 10.71V$

$V_{R2} = .714A \times 25\Omega$

$V_{R2} = 17.85$

$V_{R3} = .714 \times 100\Omega$

$V_{R3} = 71.4$

$V_T = V_{R1} + V_{R2} + V_{R3}$

$V_T = 10.71 + 17.85 + 71.4$

$V_T = 99.96$ or $100V$

Activity 5

Series Circuit Calculations

Use the figures below to calculate for all circuit values shown.

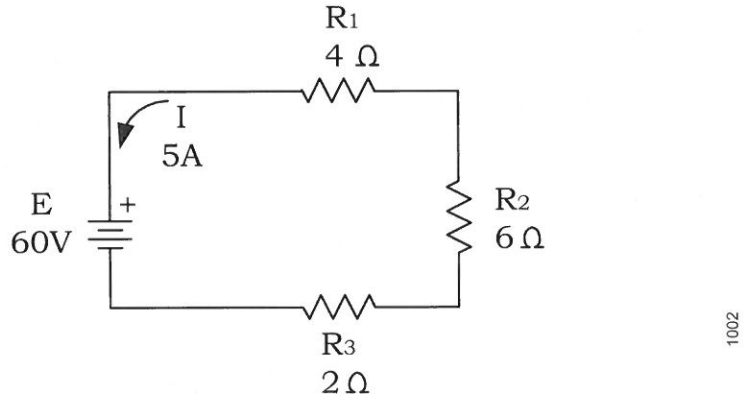

Figure 1-8

I_{R1} =	_____	I_T =	_____	E_{R2} =	_____
I_{R2} =	_____	R_T =	_____	E_{R3} =	_____
I_{R3} =	_____	E_{R1} =	_____	P_T =	_____

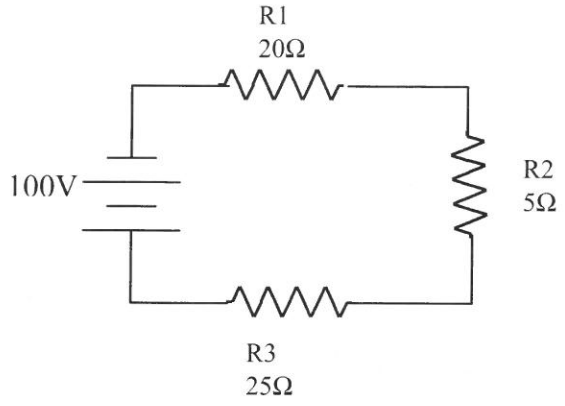

Figure 1-9

$I_{R1} =$	_____	$I_T =$	_____	$E_{R2} =$	_____
$I_{R2} =$	_____	$R_T =$	_____	$E_{R3} =$	_____
$I_{R3} =$	_____	$E_{R1} =$	_____	$P_T =$	_____

PARALLEL CIRCUIT CALCULATIONS

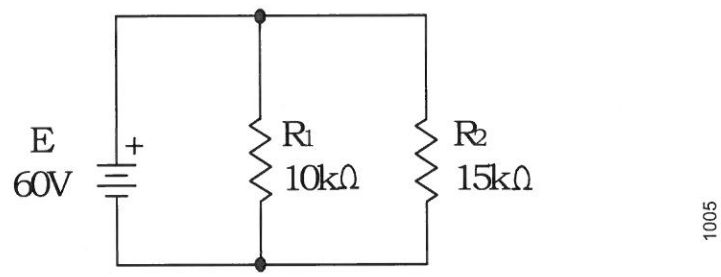

Figure 1-10

- Current Calculations

  Each resistor in parallel (like R_1 and R_2 in Figure 1-10) is an individual branch circuit when considering the flow of current. Thus, the total current through parallel resistors is always equal to the sum of the branch currents (e.g., $I_T = I_{R1} + I_{R2} + I_{Rn}$)

- Voltage Calculations

  Since each individual branch circuit is directly across from the source voltage, voltage (V) is the same across each parallel resistor (i.e., branch circuit).

- Power Calculations

  Total power is calculated the same way for resistors in either series or parallel circuits. However, each individual branch current must be considered when calculating for branch power dissipation. Remember I_T in parallel is equal to the sum of the branch currents.

Resistance Calculations

The resulting value of resistors in parallel (R_T) is always less that that of the resistor with the lowest value. Each additional resistor that is added in parallel decreases the total resistance for every parallel circuit.

Reciprocal Formula

$$R_T = \frac{1}{\frac{1}{R_1} + \frac{1}{R_2} + \frac{1}{R_n}}$$

Use the *Reciprocal* formula above (see also Steps 1, 2, and 3) to calculate the effective value of three or more parallel resistors when their values are not equal.

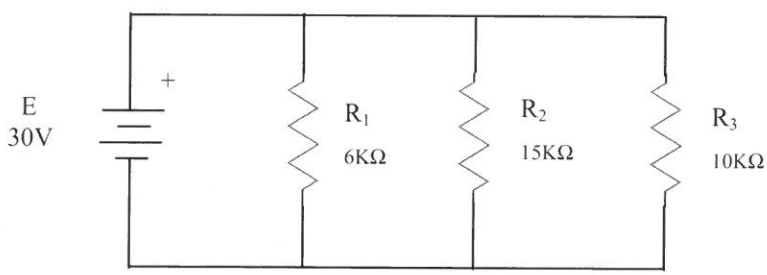

Step 1. Assign resistor values in the equation, where R_T is the effective total parallel resistance.

$$R_T = \frac{1}{\frac{1}{6k\Omega} + \frac{1}{15k\Omega} + \frac{1}{10k\Omega}}$$

Step 2. Find the lowest common denominator.

$$R_T = \frac{1}{\frac{5}{30k\Omega} + \frac{2}{30k\Omega} + \frac{3}{30k\Omega}}$$

Step 3. Perform the math.

$$R_T = \frac{1}{\frac{10}{30k\Omega}} = \frac{1}{\frac{1}{3k\Omega}} = 3k\Omega$$

Product Over Sum Formula

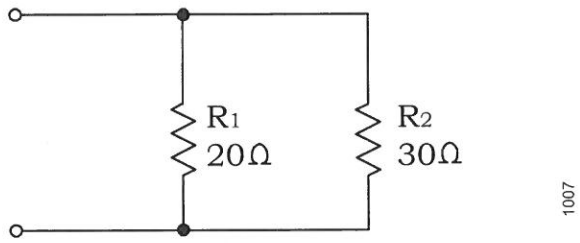

1007

Use the *Product Over Sum* formula below to calculate the effective value of two resistors in parallel when their values are not equal.

$$R_T = \frac{20\Omega x 30\Omega}{20\Omega + 30\Omega} = \frac{600\Omega}{50\Omega} = 12\Omega$$

Like Value Over Number Formula

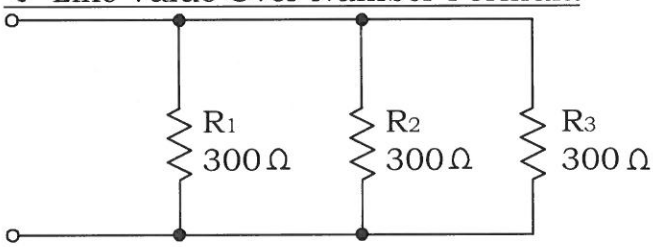

1008

Use the *Like Value Over Number* formula below to calculate the effective value of two or more parallel resistors of equal value. Note that N equals the total number of identical resistors.

$$R_T = \frac{R}{N} = \frac{300\Omega}{3} = 100\Omega$$

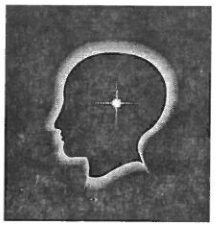

Activity 6

Parallel Circuit Calculations

Use the Reciprocal Method to solve for R_T in Figure 1-11.

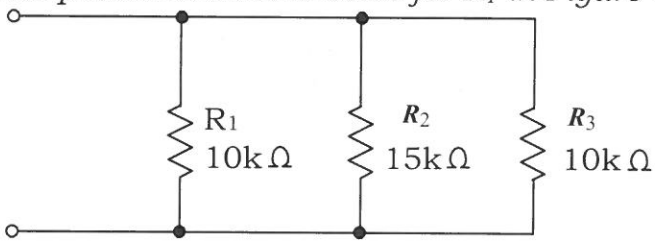

1009

R_T = _____

Figure 1-11

Use the Product Over Sum method to solve for the total parallel resistance (R_T) in Figure 1-12.

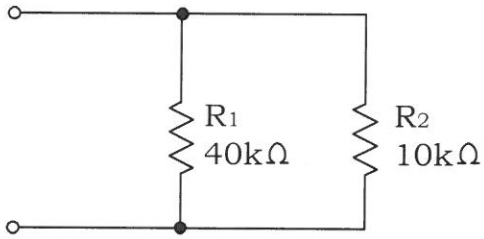

1010

R_T = _____

Figure 1-12

Solve for all circuit values in Figure 1-13.

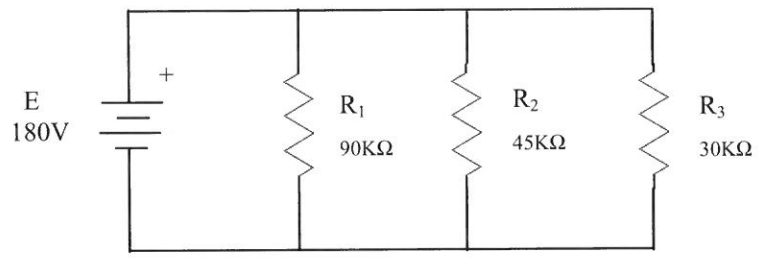

Figure 1-13

I_{R1} = _____ R_T = _____ P_{R1} = _____

I_{R2} = _____ E_{R1} = _____ P_{R2} = _____

I_{R3} = _____ E_{R2} = _____ P_{R3} = _____

I_T = _____ E_{R3} = _____

Solve for the circuit values shown in Figure 1-14.

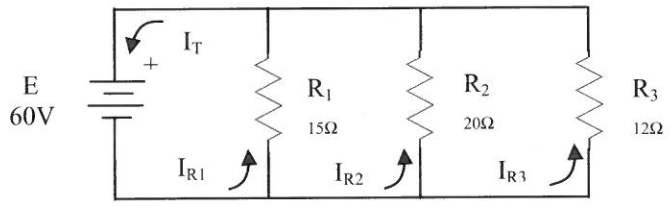

Figure 1-14

I_{R1} = _____ I_T = _____ E_{R2} = _____

I_{R2} = _____ R_T = _____ E_{R3} = _____

I_{R3} = _____ E_{R1} = _____

SERIES-PARALLEL CIRCUIT CALCULATIONS

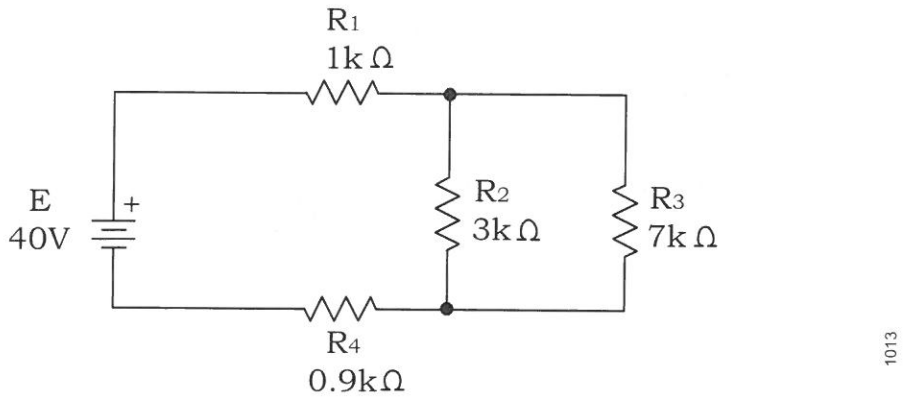

Figure 1-15

Use the six steps below to solve any series-parallel circuit problem:

Step 1. *Find the equivalent resistance (R_E) of the parallel branches and draw the equivalent series circuit.*

$$R_E = \frac{R_2 \times R_3}{R_2 + R_3}$$

Substituting Values

$$R_E = \frac{3k\Omega \times 7k\Omega}{8k\Omega + 7k\Omega}$$

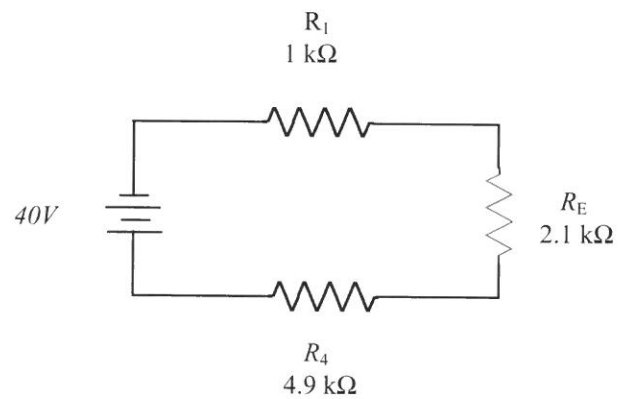

Figure 1-16

Equivalent Series circuit

$$R_E = \frac{21k\Omega}{10k\Omega}$$

$$R_E = 2.1k\Omega$$

Step 2. *Add R_E to the series resistance to solve for R_T.*

$R_E = R_1 + R_E + R_4$

Substituting Values

$R_E = 1k\Omega + 2.1k\Omega + .9k\Omega$
$R_E = 4k\Omega$

Step 3. *Calculate I_T using Ohm's Law ($I_T = \frac{E_T}{R_T}$).*

$$I_T = \frac{E_T}{R_T}$$

Substituting Values

$$I_T = \frac{40V}{4k\Omega}$$
$I_T = 10mA$

Step 4. *Calculate voltage drops across the series resistor and the equivalent resistor (V_{RE}).*

$V_{R1} = I_T x R_1$

Substituting Values

$V_{R1} = 10mA \times 1k\Omega$
$V_{R1} = 10V$

$V_{RE} = I_T x R_E$

Substituting Values

$V_{R2} = 10mA \times 2.1k\Omega$
$V_{R2} = 21V$

$V_{R4} = I_T x R_4$

Substituting Values

$V_{R4} = 10mA \times .9k\Omega$
$V_{R4} = 9V$

Step 5. *Calculate branch currents using V_{RE} for the parallel branches.*

$$I_{R2} = \frac{V_{R2}}{R_T}$$

Substituting Values

$$I_{R2} = \frac{21V}{3k\Omega}$$

$$I_{R2} = 7mA$$

$$I_{R3} = \frac{21V}{7k\Omega}$$

$$I_{R3} = 3mA$$

(Note: The sum of the branch currents equals the total current of 10mA)

Step 6. Calculate power dissipation.

$$I_T =$$

$$P_{R1} = I_{R1} \times V_{R1}$$

Substituting Values

$$P_{R1} = 10mA \times 10V$$

$$P_{R1} = 100mW$$

(Note: IR1 is equal to IT since current for the series components is the same for each series resistor.)

$$P_{R2} = I_{R2} \times V_{R2}$$

Substituting Values

$$P_{R2} = 7mA \times 21V$$

$$P_{R2} = 147mW$$

$$P_{R3} = I_{R3} \times V_{R3}$$

Substituting Values

$$P_{R3} = 3mA \times 21V$$

$$P_{R3} = 63mW$$

$P_{R4} = I_{R4} \times V_{R4}$

Substituting Values

$P_{R4} = 10mA \times 9V$
$P_{R4} = 90mW$

$P_T = P_{R1} + P_{R2} + P_{R3} + P_{R4}$

Substituting Values

$P_T = 100mW + 147mW + 63mW + 90mW$
$P_T = 400mW$

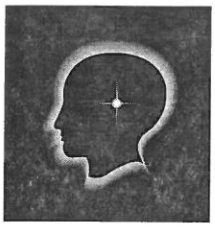

Activity 7

Series-Parallel Calculations

Use the six steps listed on pages 1-43 through 1-46 to solve for the circuit values below.

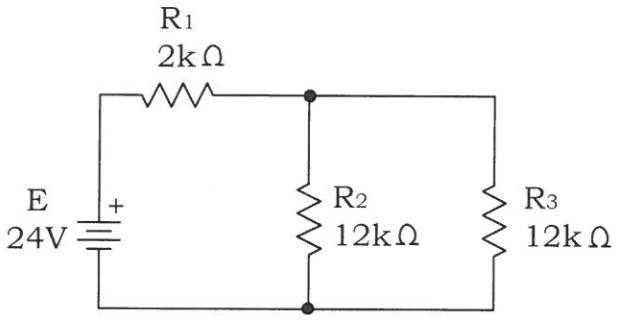

Figure 1-17

$R_E =$	_____	P_T	_____	$P_{R2} =$	_____
E_{R2}	_____	I_{R1}	_____	$I_{R3} =$	_____
$I_{R2} = \frac{V_{R2}}{R_T}$	_____	$I_{R2} =$	_____		
$E_{R1} =$	_____	$I_{R3} =$	_____		
$E_{R3} =$	_____	$P_{R1} =$	_____		

Conductor Wire Specifications

GAGE SPECIFICATIONS

- A gage number specifies the size of a round conductor wire.

- Each gage number represents a different diameter of wire.

- The diameter of a wire is specified in mils, and one mil is equal to .001 in.

- Electric wire is measured with the American wire gage (AWG). This standard is the same as the Brown and Sharpe gage used by machinists.

- The smaller the gage number of the wire is, the larger the diameter of the wire.

- The width slot leading to the hole in the gage indicates the gage size. The hole is designed to be larger than the wire to allow the wire to move freely through the slot.

CROSS-SECTIONAL AREA

- The cross-sectional area of a conductor is specified in circular mils (cmil or CM)

- One circular mil is the area of a circle with a diameter of 1 mil. The cross-sectional area of a conductor is equal to the diameter in mils squared.

- The amount of current a copper wire can safely carry depends on the cross-sectional area of the wire and how much heat the wire can dissipate before the insulation is damaged and the metal is affected.

INSULATION

- The insulation used on electric wires and cables is rated as to its effectiveness in resisting voltage breakdown, harsh environments, flammability and heat.

- The maximum temperature rating is represents the maximum continuous temperature that the insulation should be exposed to.

- The voltage ratings for both cables and wires are dependent upon both the type of insulation and the thickness of the insulation. For insulated wire, the voltage rating represents the maximum voltage that the insulation can withstand continuously.

- Insulating materials are also rated as to their relative resistance to damage by various materials and environments such as acid, abrasion, flame, heat and cold.

Wire Gage Chart

Gage (AWG)	Diameter (Inches)	Resistance (Ohms/1000 ft.)
0	.3249	.09827
1	.2893	.1239
2	.2576	.1563
3	.2294	.1970
4	.2043	.2485
5	.1819	.3133
6	.1620	.3951
7	.1443	.4982
8	.1285	.6282
9	.1144	.7921
10	.1019	.9989
11	.09074	1.260
12	.08081	1.588
13	.07196	2.003
14	.06408	2.525
15	.05707	3.184
16	.05082	4.016
17	.04526	5.064
18	.04030	6.385
19	.03589	8.051
20	.03196	10.15
21	.02846	12.80
22	.02535	16.14
23	.02257	20.36
24	.02010	25.67
25	.01790	32.37
26	.01594	40.81
27	.01420	51.47
28	.01264	64.90
29	.01126	81.83
30	.01003	103.2

Figure 1-18

Activity 8

Conductor Wire Specifications

Match the term on the left with appropriate description on the right.

Terms	Description
_____Maximum temperature	a. Specifies the size of a round conductor wire.
_____Cross-sectional area in circular Mils	b. The area of a circle with a diameter of 1 mil
_____Gage Number	c. The highest temperature rating to which insulation can be exposed.
_____Circular Mil	d. Equal to the diameter of a conductor in mils squared.

Complete the statements below.

1. The smaller the gage number of the wire, (smaller/larger)_____ the diameter of the wire.

2. The diameter of a wire is specified in _____.

3. The _____ leading to the hole indicates the gage size.

4. Electrical wire is measured with a/an _____.

5. The _____ ratings are dependent upon the type of insulation and the thickness of the insulation.

AC Circuits

AC Waveforms

- Alternating current is the term applied to current that constantly changes in amplitude and periodically reverses direction.

- Current supplied by a battery is direct current. This means that the current flows in one direction only. This current is unidirectional.

- Alternating current is bi-directional. The electrons flow first in one direction and then in the opposite direction. If it were possible to continuously reverse the polarity of a battery, alternating current would be the result.

- Graphic representations of how voltage and current change in amplitude and direction over a period of time are called waveforms.

- Figure 1-19 shows various waveforms of AC. These AC waveforms are visible through the use of an oscilloscope.

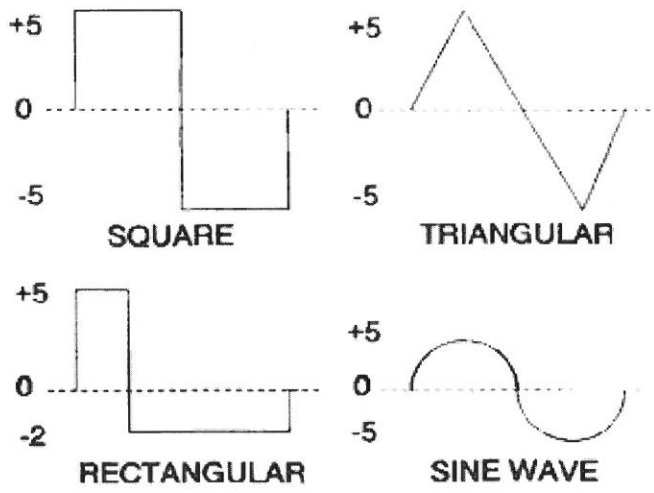

Figure 1-19

COMMON AC TERMS

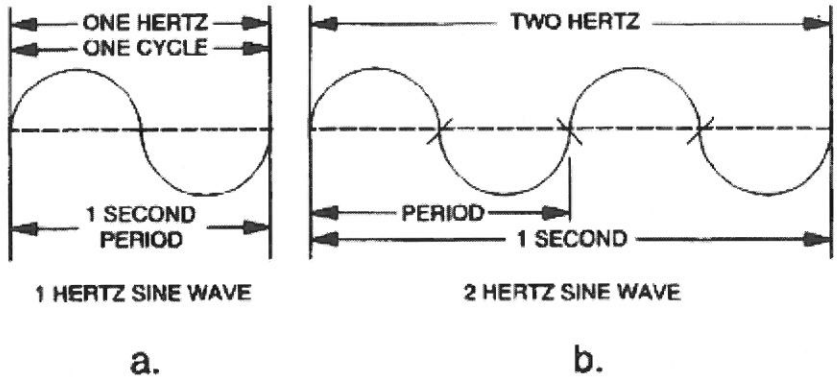

Figure 1-20

- Alternation. An alternation is the variation, either positive or negative, of a waveform from zero to maximum and back to zero.

- Peak amplitude. Peak amplitude refers to the maximum swing, or height of one alternation. Amplitude and voltage are used interchangeably.

- Peak-to-Peak. Peak-to-peak represents the distance between the maximum positive and the maximum negative peaks.

- Cycle. One cycle of an AC waveform represents 360° of a sine wave.

- Frequency. The frequency of any waveform is the number of cycles that occur in a given period of time. The unit of measure for frequency is the hertz. A hertz, abbreviated Hz, is equal to one cycle per second.

- Time. Time, abbreviated "t," is equal to one cycle of AC. The terms period, time, and duration are synonymous. The unit of measure for time is the second. Time and frequency have an inverse relationship. As the period of time for one cycle becomes short, the frequency increases, and vice-versa.

- In phase. Waveforms are considered to be "in phase" if they have the same frequency and they pass through zero and reach their positive peaks at the same time.

- Out-of phase. Two or more waveforms are considered to be "out-of-phase" when they have the same frequency but they do not pass through zero at the same time.

- Effective Value (Root-mean-square RMS). RMS is defined as the amount of current or voltage that produces the same amount of work as an equal amount of direct current or voltage. The terms effective and RMS are used interchangeably.

- Average Value. Average value is defined as the average instantaneous values of all points in a single alternation.

AC CALCULATIONS

- Peak Value

$$V_{pk} = \frac{1}{2}V_{pk\text{-}pk}$$

Example: $V_{pk} = \frac{1}{2}(20V)$

$$V_{pk} = 10V$$

- Peak-to-Peak Value

$$V_{pk\text{-}pk} = 2V_{pk}$$

Example: $V_{pk\text{-}pk} = 2(25V)$

$$V_{pk\text{-}pk} = 50V$$

- Effective Voltage (RMS)

$$V_{eff} = .707V_{pk}$$

or

$$V_{rms} = .707V_{pk}$$

Example: $V_{eff} = .707(30V)$

$$V_{eff} = 21.21V$$

- If V_{rms} value is already known, use this formula

$$V_{pk} = 1.414 \times V_{rms}$$

Example: $V_{pk} = 1.414 \times 28V$
$V_{pk} = 39.59V$

- Average Voltage

$$V_{ave} = .636V_{pk}$$

Example: $V_{ave} = .636 \times 40V$
$V_{ave} = 25.44V$

$V_{ave} = .9 \ V_{eff}$

- Time to Frequency

$$T = \frac{1}{f}$$

Example: $T = \frac{1}{50kHz}$
$T = 20\mu s$

- Frequency to Time

$$F = \frac{1}{t}$$

Example: $F = \frac{1}{40\mu s}$
$F = 25kHz$

REACTIVE COMPONENTS

- Inductors and capacitors possess properties that oppose changes in circuit conditions. They exhibit a characteristic called reactance.

- Reactance, represented by the letter "X," is the name used to represent the opposition to current flow by capacitors and inductors in an AC circuit.

- The primary difference between resistors and reactive components is that resistors change electrical energy into heat energy. This causes vital energy to be lost. A reactive component, on the other hand, stores energy and returns it back into the circuit.

- The reactance of a capacitor is called capacitive reactance. It is abbreviated X_C. X_C causes voltage to lag current through a capacitor. The phase shift between the capacitor's current and voltage is 90°.

- The reactance of an inductor is called inductive reactance. It is abbreviated X_L. X_L causes voltage to lead current through an inductor. The phase shift between the inductor's current and voltage is 90°.

CAPACITANCE

- Capacitance is the measure of a capacitor's ability to store an electrical charge. This charge is stored in the form of an electrostatic field between the capacitor's plates.

- The capacitance of a capacitor is determined by four factors:
  - The area of the plates
  - The distance between the plates
  - The type of dielectric material used
  - Temperature

INDUCTANCE

- Inductance is the electrical property that opposes any change in the magnitude of current in a circuit. An inductor stores energy in the form of a magnetic field. An inductor is usually formed by making several turns of a conductor into a coil.

- The amount of inductance that a coil produces is determined by four factors:
  - The type of core material used.
  - The number of turns of wire
  - The spacing between turns of wire.
  - The diameter of the coil or (core).

FREQUENCY

- The formula used to express capacitive reactance is as follows:

$$X_C = \frac{1}{2\pi fC}$$

Where $\pi = 3.14$
f = frequency, expressed in hertz
C = capacitance, expressed in farads
X_C = capacitive reactance, expressed in ohms since it is in opposition to current flow.

- There is an inverse relationship between frequency, capacitance and X_C. As frequency or capacitance is increased, X_C is decreased. Additionally, as frequency or capacitance is decreased, X_C will be increased.

- The formula used to express inductive reactance is as follows:

$$X_L = 2\pi fl$$

Where $\pi = 3.14$
f = frequency, expressed in hertz
L = inductance is expressed in henries
X_L = inductive reactance, expressed in ohms since it is in opposition to current flow.

There is a direct relationship between frequency, inductance and X_L. As frequency is increased X_L is increased.

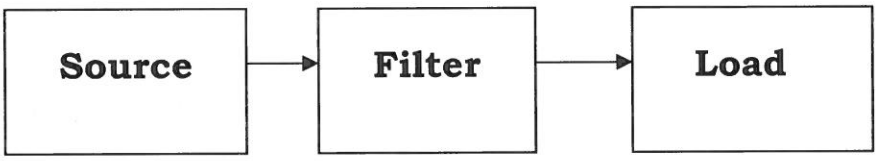

Block Diagram of a Filter Circuit

Figure 1-21

- Filters are used to selectively pass certain frequencies and block other frequencies from source to load.

- Filters are constructed of reactive components that have been grouped together to control the output voltage amplitude at certain frequencies.

- Two important terms associated with filters are attenuation and cutoff frequency. Attenuation is defined as the significant reduction of the amplitude of a signal. Cutoff frequency is the frequency at which attenuation starts to increase rapidly.

- The four major types are filters are the Low Pass, High Pass, Band Pass, and Band Reject.

- Low Pass Filters pass frequencies below the cutoff frequency and block all frequencies above the cutoff frequency.

Figure 1-22

Low Pass Filters

- High Pass Filters pass to the load all frequencies higher than the cutoff frequency, while lower frequencies are attenuated.

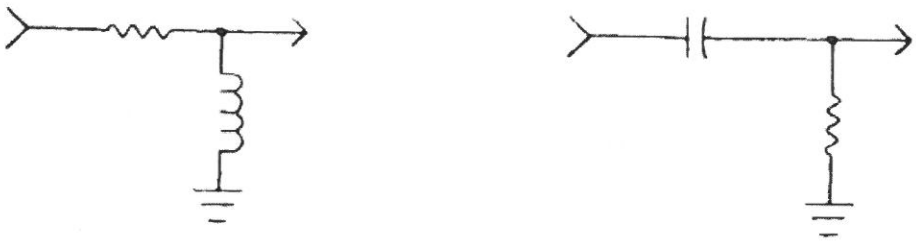

Figure 1-23

High Pass Filters

- Band Pass Filters pass a small band of frequencies and block all other frequencies.

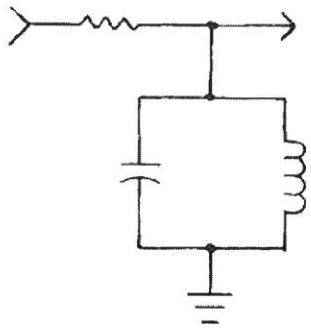

Parallel Band Pass Filter

Figure 1-24

- Band Reject Filters attenuate a small band of frequencies and pass all other frequencies.

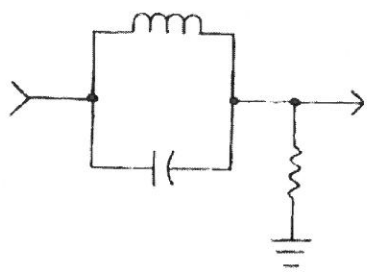

Parallel Band Reject Filter

Figure 1-25

POWER IN AC CIRCUITS

There are two types of power present in an AC circuit. They are true power and apparent power. The ratio of true power to apparent power is called the power factor.

- True Power. True power is the actual power used by the circuit. Unit of measure is the Watt (W).

- The formula used to express true power is shown below.

$$P = I \times V \cos \theta \text{ (cosine of theta)}$$

- Apparent Power. Apparent power is the power that appears to be present when voltage and current in a circuit are measured separately. Unit of measure is the Volt-ampere (VA)

- The formula used to express true power is shown below.

$$P_{app} = I \times V$$

- Power Factor. The power factor is the ratio of true power to apparent power.

  The formula used to express the power factor is shown below.

$$PF = \cos \theta = \frac{P_{true}}{P_{app}}$$

MAXIMUM POWER TRANSFER

- Transferring the maximum amount of power from source to load is called Maximum Power Transfer.

- To achieve maximum power transfer to any load, it is necessary for the load resistance to equal the internal resistance of the source. In an AC circuit, this process is called Impedance Matching. When the source voltage is mismatched to the load, the signal will be attenuated and power will be lost.

- Impedance is the combined opposition offered by resistive and reactive components in an AC circuit. It is represented by the symbol "Z."

CABLE IMPEDANCE

- Characteristic cable impedance is defined as the ratio of the electric field strength to the magnetic field strength for wave propagating in the cable. This is expressed mathematically using Ohm's Law:

$$\frac{\text{Volts/m}}{\text{Amps/m}} = \text{Ohms}$$

- The magnitude of the impedance can be determined using Ohms Law.

$Z_o = V/I$ (Characteristic impedance is usually designated as Z_o)

- The voltages and the currents are dependent upon the inductive reactance and the capacitive reactance in the cable.

- A mismatch in source and output impedances can result in reflections, which result in a loss of power, especially if the cable is crushed, kinked or the connectors are installed improperly.

The purpose of this chapter is to provide a general understanding of the subject areas addressed. For more information on the topics covered in this unit, refer to the reference books and other study materials listed in the Study Guide for the Basic Electronics Test.

SUMMARY

1. *The first commercial radio station was established in 1920.*
2. *Commercial television began in 1946.*
3. *The smallest part than an element can be divided into, and still retain its natural characteristics, is an atom.*
4. *An atom contains particles – electrons, neutrons, and protons. The electron has a negative charge, the proton carries a positive charge and the neutron has a neutral charge.*
5. *The center of the atom is called the nucleus. The neutrons and protons are housed here.*
6. *The Law of Electrical Charges states that like charges repel each other and unlike charges attract each other.*
7. *All elements fall into one of three electrical categories: conductors, insulators, and semiconductors.*
8. *Conductors are materials that offer low resistance to current flow. Silver and copper are examples of conductors. Conductors contain up to three valence electrons.*
9. *Insulators offer high resistance to current flow. Examples of insulators are rubber and glass. Insulators have more than four valence electrons.*
10. *Materials whose electrical characteristics fall between those of conductors and insulators are called semiconductors. Silicon and germanium are examples of semiconductor material. Semiconductors contain four valence electrons.*
11. *Electrical prefixes simplify calculations, provide a convenient method of expressing very large or very small numbers, and are commonly used in electronics.*
12. *There are three basic circuit configurations. They are series, parallel, and series-parallel circuits.*
13. *A series circuit has only one path for current to flow. Current is the same across each component.*
14. *Parallel circuits have more than one path for current to flow. Voltage is the same across each branch.*
15. *In a series-parallel circuit, total current runs through the series components and divides according to the parallel resistances.*
16. *A gage number specifies the size of a round conductor wire. The smaller the gage number of the wire is, the larger the diameter of the wire.*
17. *Alternating current is current that changes in amplitude (voltage/height) and periodically reverses direction.*
18. *Frequency is the number of cycles that occur in a given period of time. The unit of measure is the hertz.*

19. *Time is the period of one cycle of alternating current. Period, time and duration are synonymous. The unit of measure is in seconds.*
20. *The effective value or the RMS is the amount of current or voltage that produces the same amount of work as an equal amount of direct current or voltage.*
21. *Filters are designed to selectively pass certain frequencies from the generator to the load while blocking other frequencies.*
22. *Low pass filters pass frequencies below the cutoff frequency and blocks all frequencies above the cutoff frequency.*
23. *High pass filters pass to the load all frequencies higher than the cutoff frequency while lower frequencies are blocked.*
24. *A band pass filter passes frequencies in a narrow banc of the frequency spectrum and rejects frequencies below or above the cutoff frequencies.*
25. *A band reject filter blocks a narrow band of frequencies while frequencies below or above the cutoff frequencies are passed.*

Chapter 1 Self Test

Answer the following questions.

1. A circuit that contains several components in a single package is called a/an

    a. Diode
    b. Transistor
    c. Microprocessor
    d. Integrated Circuit

2. A circuit that contains most of the circuitry of a computer on a single chip is called a/an

    a. Diode
    b. Transistor
    c. Microprocessor
    d. Integrated Circuit

3. Draw a line and match the particle of the atom with its associated electrical charge.

a. Electron	Positive
b. Neutron	Negative
c. Proton	Neutral

4. The Law of Electrical Charges states that like charges _____ and unlike charges _____ each other.

5. Conductors are materials that offer _____ (high/low) resistance to current flow.

6. Insulators are materials that _____ current flow.

7. Neutrons and protons are found in the _____of an atom.

8. Electrons are found in the _____ of an atom.

9. The outermost shell of an atom is called the _____ shell.

10. _____ material contains four valence electrons.

11. Convert the following electrical prefixes to another electrical prefix.

a. 7.8 G =- _____M

b. 0.00037μ = _____n

c. 0.21k = _____m

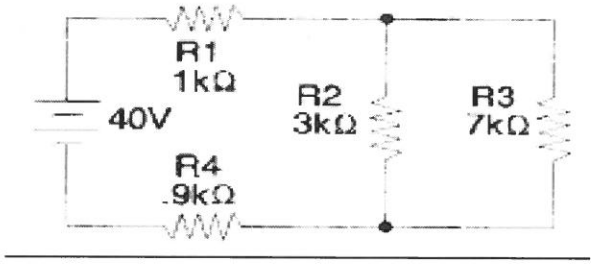

Figure 1-26

12. Use Figure 1-26 to solve for the following circuit values.

a. I_T = _____

b. V_{R3} = _____

c. I_{R3} = _____

d. P_T = _____

13. The insulation used on electric wires and cables is rated for _____.

a. Voltage
b. Resistance
c. Materials
d. All of the above.

14. A no. 14 gage wire is (smaller/larger) _____ in diameter than a no.5 gage wire.

15. The term "hertz" means

    a. time.
    b. cycles.
    c. duration.
    d. cycle per second.

16. The peak amplitude of an AC sine wave refers to the

    a. duration of one cycle.
    b. time of one alternation.
    c. frequency of one alternation.
    d. maximum height of one alternation.

17. Current _____ voltage through an inductor by _____ degrees.

18. Current _____ voltage through a capacitor by _____ degrees.

19. Attenuation is defined as _____.

    a. The output voltage amplitude
    b. A significant reduction in amplitude
    c. The frequency that produces a reduction in amplitude

20. What type of filter is shown?

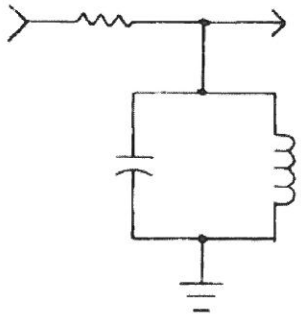

Figure 1-27

    a. series resonant band pass filter
    b. series resonant band reject filter
    c. parallel resonant band pass filter
    d. parallel resonant band reject filter

Chapter 1 Answer Key

Activity 1

1. Microprocessors contain the equivalent of millions of transistors, and reduce most of the circuitry of a computer to a single IC. Microprocessors are constructed of four parts: memory, ALU, control unit, and input/output ports.

2. Integrated circuits are complex combinations of several kinds of devices in a single package (substrate). ICs contain thousands of transistors, diodes, resistors, and capacitors in various arrangements.

3. True

4. False

5. False

Activity 2

1. False
2. False
3. False
4. True
5. True
6. False
7. True

Activity 3

1. Low
2. Oppose
3. Four
4.
    a. Insulator
    b. Conductor
    c. Insulator
    d. Semiconductor
    e. Conductor
    f. Semiconductor
5. Valence

Activity 4

1. 3k
2. 15m
3. .75k
4. 5,000p
5. 4.2M
6. 3G
7. 1,500n
8. 82μ

1. 25,000
2. .0341
3. 5,780,000
4. 750

1. .002k
2. 10,000,000p
3. .0025μ
4. 500,000m

Activity 5

I_{R1} = 5A, I_{R2} = 5A, I_{R3} = 5A, I_T = 5A, R_T = 12Ω, V_{R1} = 20V, V_{R2} = 30V, V_{R3} = 10V, P_T=300W

I_{R1} = 2A, I_{R2} = 2A, I_{R3} = 2A, I_{R3} = 2A, I_T = 2A, R_T = 50Ω, V_{R1} = 40V, V_{R2} = 10V, V_{R3} = 50V, P_T=200W

Activity 6

R_T= 3.75kΩ

R_T = 8kΩ

I_{R1} = 2mA, I_{R2} = 4mA, I_{R3} = 6mA, I_T = 12mA, R_T = 15kΩ, V_{R1} = 180V, V_{R2} = 180V, V_{R3} = 180V, P_{R1} = .360W, P_{R2} = .720W, P_{R3} = 1.080W

I_{R1} = 4A, I_{R2} = 3A, I_{R3} = 5A, I_T = 12A, R_T = 5Ω, V_{R1} = 60V, V_{R2} = 60V, V_{R3} = 60V

Activity 7

$R_E = 6k\Omega$, $R_T = 8k\Omega$, $I_T = 3mA$, $V_{R1} = 6V$, $V_{RE} = 18V$, $P_T = 72mW$, $I_{R1} = 3mA$, $I_{R2} = 1.5mA$, $I_{R3} = 1.5mA$, $I_{R3} = 1.5mA$, $P_{R1} = 18mW$, $P_{R2} = 27mW$, $P_{R3} = 72mW$

Activity 8

Terms	Description
__c__ Maximum temperature	a. Specifies the size of a round conductor wire.
__d__ Cross-sectional area in circular Mils	b. The area of a circle with a diameter of 1 mil
__a__ Gage Number	c. The highest temperature rating to which insulation can be exposed.
__b__ Circular Mil	d. Equal to the diameter of a conductor in mils squared.

1. The smaller the gage number of the wire, (smaller/larger)**larger** the diameter of the wire.

2. The diameter of a wire is specified in **mils**.

3. The **width slot** leading to the hole indicates the gage size.

4. Electrical wire is measured with a/an **AWG**.

5. The **voltage** ratings are dependent upon the type of insulation and the thickness of the insulation.

Chapter 1 Self Test

Answer the following questions.

1. A circuit that contains several components in a single package is called a/an

   a. Diode
   b. Transistor
   c. Microprocessor
   d. Integrated Circuit

2. A circuit that contains most of the circuitry of a computer on a single chip is called a/an

   a. Diode
   b. Transistor
   c. ***Microprocessor***
   d. Integrated Circuit

3. Draw a line and match the particle of the atom with its associated electrical charge.

a. Electron	Positive
b. Neutron	Negative
c. Proton	Neutral

4. The Law of Electrical Charges states that like charges ***repel*** and unlike charges ***attract*** each other.

5. Conductors are materials that offer ***low*** (high/low) resistance to current flow.

6. Insulators are materials that ***oppose*** current flow.

7. Neutrons and protons are found in the ***nucleus*** of an atom.

8. Electrons are found in the ***orbit*** of an atom.

9. The outermost shell of an atom is called the ***valence*** shell.

10. ***Semiconductor*** material contains four valence electrons.

11. a. 7800M b. .37n c. 210,000m

12. a. 10mA b. 21V c. 3mA d. 400mW

13. d

14. smaller

15. d

16. d

17. lags; 90°

18. leads; 90°

19. b

20. c